Schematic:

REV.	ECN NO.	DESCRIPTION	DATE	APPD
A	REL		2010/04/06	

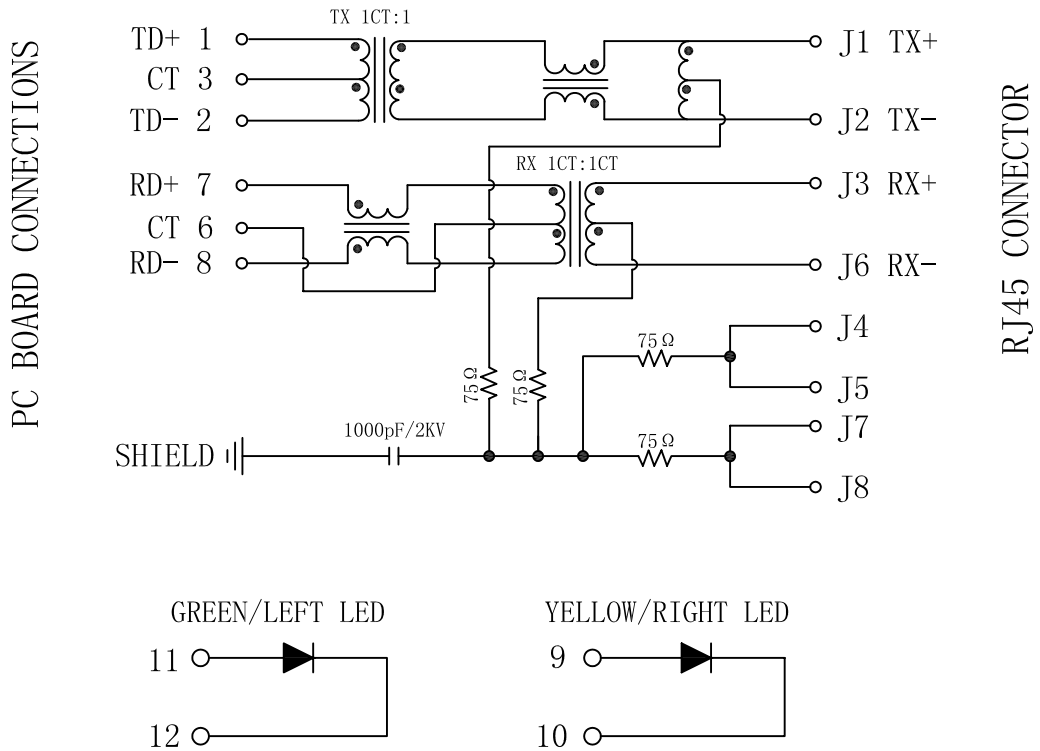

ELECTRICAL SPECFICATIONS @25℃

1. Turn Ratio(±2%):
   TX=1CT:1 RX=1CT:1CT
2. Inductance OCL: 350uH MIN
   @100KHz/0.1V,8mA DC Bias
3. Insertion Loss:
   -1.0dB MAX @ 0.3-100MHz
4. Return Loss:
   -18dB MIN @ 1-30MHz
   -16dB MIN @ 40MHz
   -14dB MIN @ 50MHz
   -12dB MIN @ 60-80MHz
5. Cross talk:
   -45dB MIN @ 30MHz
   -40dB MIN @ 60MHz
   -35dB MIN @ 100MHz
6. Common Mode Rejection:
   -35dB MIN @ 30MHz
   -30dB MIN @ 60MHz
   -25dB MIN @ 100MHz
7. Hipot:1500Vrms
8. Operating Temperature: 0℃ TO 70℃

RoHS 2002/95/EC

X:X ±0.20	APPD:	LINK-PP INT'L TECHNOLOGY CO., LIMITED	
X:XX ±0.10	CHKD:	Title: Vertical RJ45 Connector With 10/100 Magnetic	
X:XXX ±0.05	DR: TOM		
ANGLES ±1°	UNIT: Inch/mm	PART NO.: LPJD0025BENL	
SCALE: 2/1	SHEET: 1/2	REV: A	DWG NO.: LP10040608

Mechanical:

REV.	ECN NO.	DESCRIPTION	DATE	APPD
A	REL		2010/04/06	

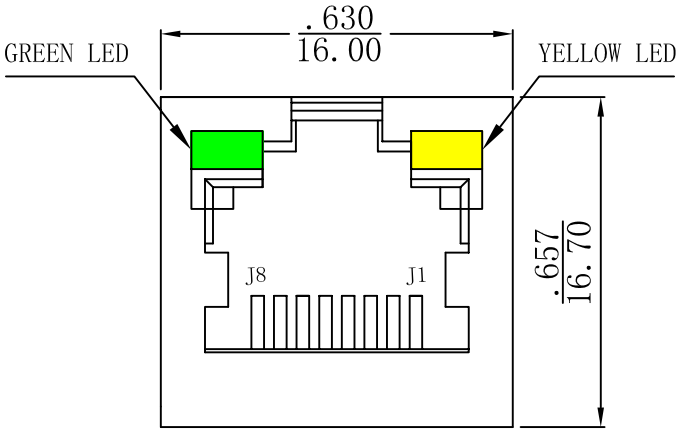

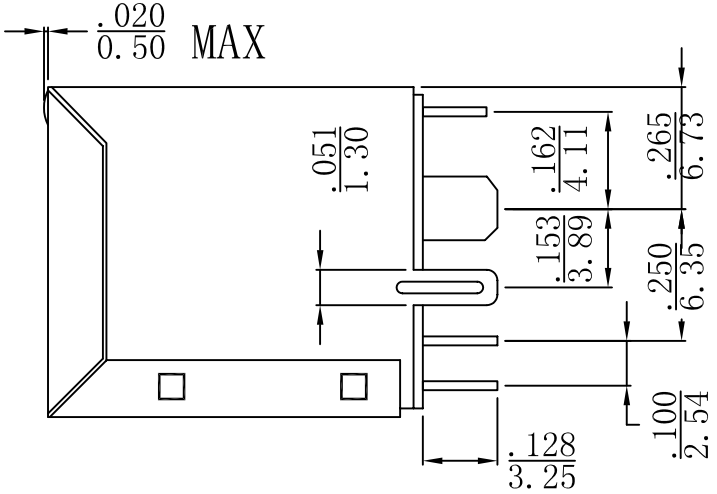

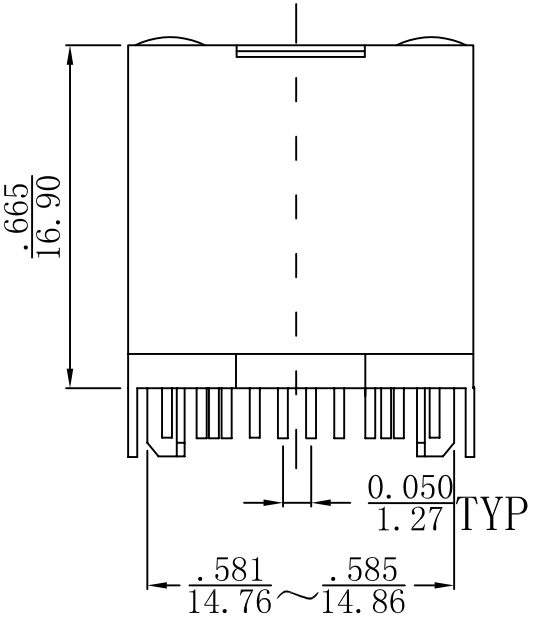

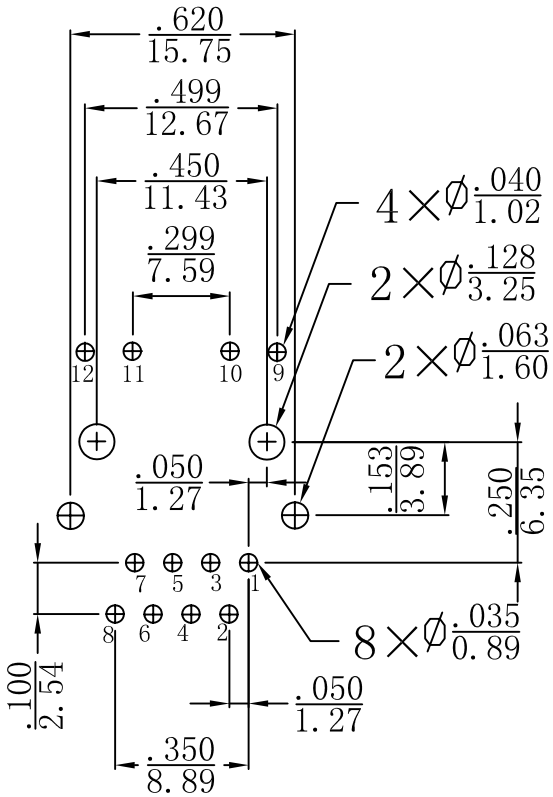

SUGGESTED PCB LAYOUT (TOP VIEW)

NOTES:

1. Designed to support application, such as SOHO(ADSL modems), LAN-on-Motherboard(LOM), hub and Switches.
2. Meets IEEE 802.3 specification
3. Connector Materials:
   Housing: Thermoplastic UL94V-0
   Contact/Shield: Copper alloy
   Shield plating: Nickel
   Contact plating: Gold 6 micro-inches min. In contact area.
4. Wave solder tip temperature: 265℃ Max
   Wave solder tip temperature time: 5 Sec Max

RoHS 2002/95/EC

X:X	±0.20	APPD:	LINK-PP INT'L TECHNOLOGY CO., LIMITED
X:XX	±0.10	CHKD:	Title: Vertical RJ45 Connector With 10/100 Magnetic
X:XXX	±0.05	DR: TOM	
ANGLES	±1°	UNIT: Inch/mm	PART NO.: LPJD0025BENL

SCALE: 2/1	SHEET: 2/2	REV: A	DWG NO.: LP10040608	