Schematic:

REV.	ECN NO.	DESCRIPTION	DATE	APPD
A	REL		2010/06/17	

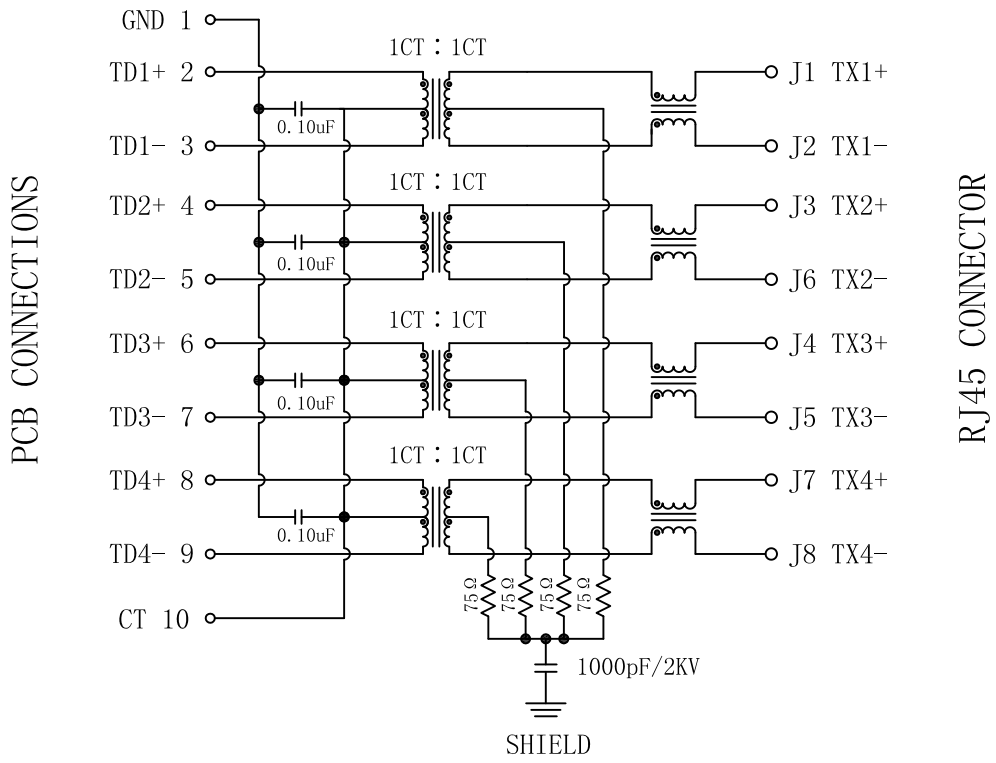

ELECTRICAL SPECFICATIONS @25℃

1. Turn Ratio(±2%):
   1CT:1CT
2. Inductance OCL: 350uH MIN
   @100KHz/0.1V,8mA DC Bias
3. Insertion Loss:
   -1.1dB MAX @ 0.1-100MHz
4. Return Loss:
   -18dB MIN @ 1-30MHz
   -12+20LOG(f/80MHz)dB MIN @ 30-100MHz
5. Cross talk:
   -35dB MIN @ 1-60MHz
   -25dB MIN @ 60-100MHz
6. Common To Common Mode Rejection:
   -35dB MIN @ 0.1-100MHz
7. Hipot Test: 1500Vrms MIN
8. Operating Temperature Range: 0℃ TO 70℃

RoHS 2011/65/EU

X:X ±0.25	APPD:	LINK-PP INT'L TECHNOLOGY CO., LIMITED	
X:XX ±0.20	CHKD:	TITLE: RJ45 Connector with 1000 Base-T Integrated Magnetics	
X:XXX ±0.05	DR: TOM		
ANGLES ±1°	UNIT: mm	PART NO.: LPJG0868CNL	
SCALE: 2/1	SHEET: 1/2	REV: A	DWG NO.: LP10061712

Mechanical:

REV.	ECN NO.	DESCRIPTION	DATE	APPD
A	REL		2010/06/17	

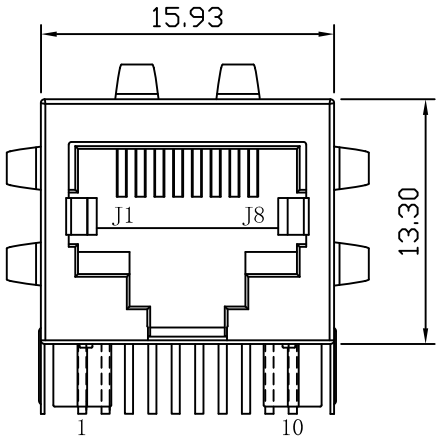

Front Side View

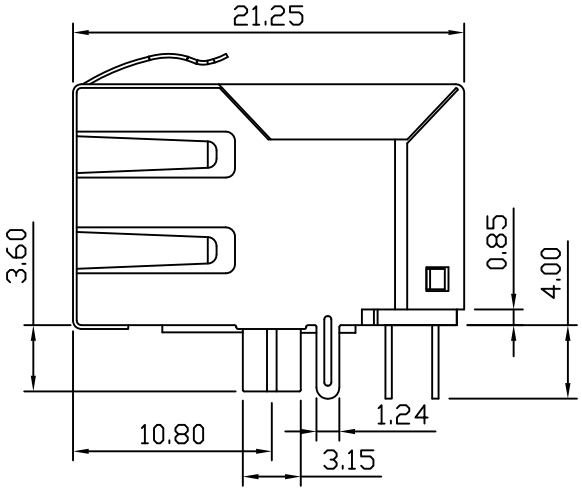

Left Side View

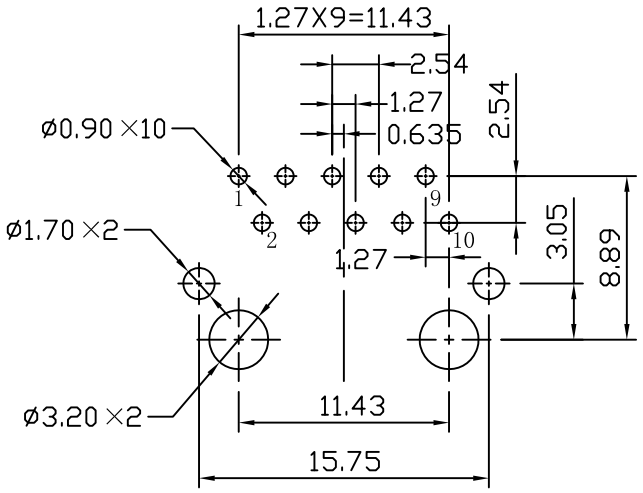

Suggested PCB Layout(Top View)

NOTES:

1. Designed to support application, such as SOHO(ADSL modems), LAN-on-Motherboard(LOM), hub and Switches.
2. Meets IEEE802.3 specification
3. Connector Materials:
   Housing: Thermoplastic PBT+30%G.F UL94V-0
   Contact: Phosphor Bonze C5210R-EH Thickness=0.35mm
   Pins: Brass C2680R-H Thickness=0.35mm
   Shield: SUS 201-1/2H Thickness=0.2mm
   Contact plating: Gold 6 micro-inches min. In contact area.
4. Wave solder tip temperature: 265℃ Max, 5 Sec Max.

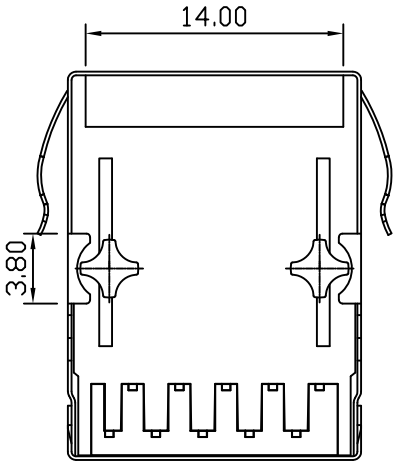

Bottow Side View

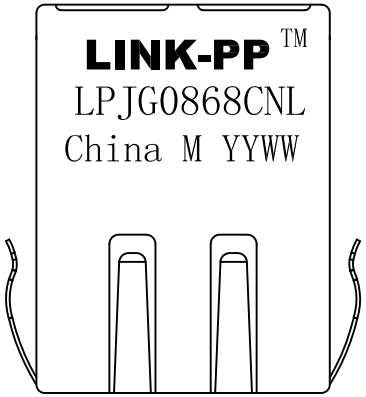

Top Side View

X:X ±0.25	APPD:	LINK-PP INT'L TECHNOLOGY CO., LIMITED	
X:XX ±0.20	CHKD:	TITLE: RJ45 Connector with 1000 Base-T Integrated Magnetics	
X:XXX ±0.05	DR: TOM		
ANGLES ±1°	UNIT: mm	PART NO.: LPJG0868CNL	
SCALE: 2/1	SHEET: 2/2	REV: A	DWG NO.: LP10061712