Mechanical:

REV.	ECN NO.	DESCRIPTION	DATE	APPD
A	REL		2013/04/11	

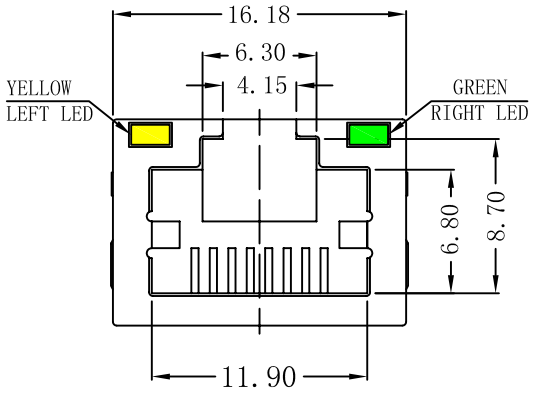

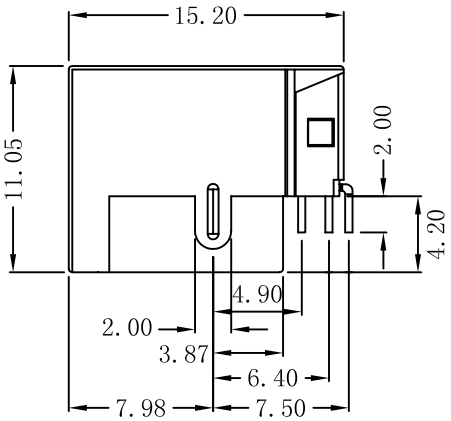

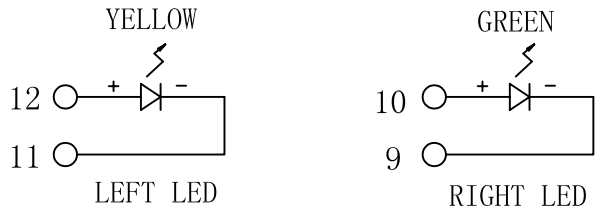

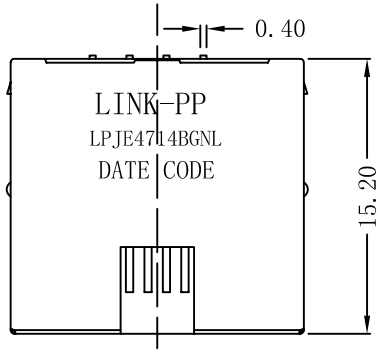

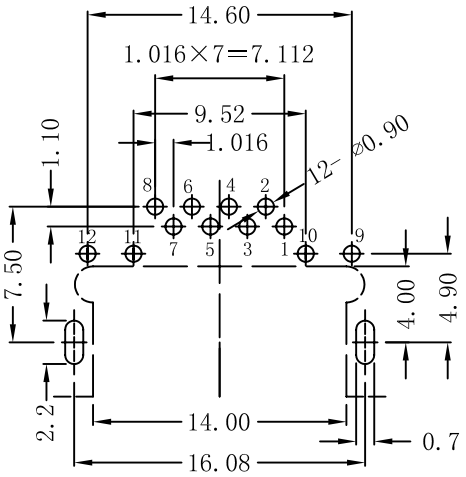

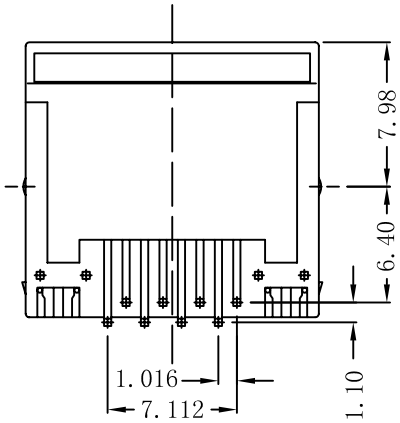

SUGGESTED PCB LAYOUT(TOP VIEW)

NOTES:

ELECTRICAL:

1. VOLTAGE RATING: 125 VAC RMS.
2. CURRENT RATING: 1.5 AMP
3. CONTACT RESISTANCE: 30 MILLIOHMS MAX
4. INSULATION RESISTANCE: 500 MEGOHMS MIN @500 VDC
5. DIELECTRIC STRENGTH:
   1000 VAC RMS 50Hz or 60Hz, 1 MIN

MECHANICAL:

1. HOUSING & INSERT MATERIAL: PBT UL94V-0.
2. CONTACT MATERIAL: DIAMETER 0.45MM PHOSPHOR BRONZE
   GOLD PLATING OVER NICKEL.
3. SHIELD:
   0.20～0.25MM THICKNESS BRASS WITH TIN PLATED.
4. MATING/UNMATING FORCE: 2.2KG.F MAX.
5. RETENTION STRENGTH: 7.7KG.F MIN BETWEEN JACK AND PLUG.
6. OPERATING LIFE: 600 CYCLES MIN.
7. PLATING GOLD THICKNESS:
   GOLD FLASH/1.5u″/3u″/6u″/15u″
   /30u″/50u″

ENVIRONMENTAL:

1. TEMPERATURE RANGE: -45℃～+70℃.

RoHS 2002/95/EC

TEL: 86-752-3322916
FAX: 86-752-3161926
WEBSITE: www.link-pp.com

X:X	±0.20	APPD:	LINK-PP INT'L TECHNOLOGY CO., LIMITED
X:XX	±0.10	CHKD:	
X:XXX	±0.05	DR: TOM	TITLE: RJ45 Connector - THT
ANGLES	±1°	UNIT: mm	PART NO.: LPJE4714BGNL
	SCALE: 2/1	SHEET: 1/1	REV: A / DWG: LP13041102