REV	DESCRIPTION OF CHANGE	REVIEWED BY	ISSUE DATE
A	FIRST ISSUE	LEO	2021-11-12

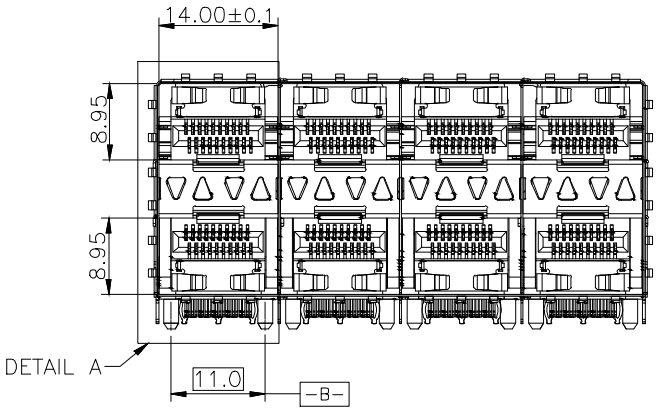

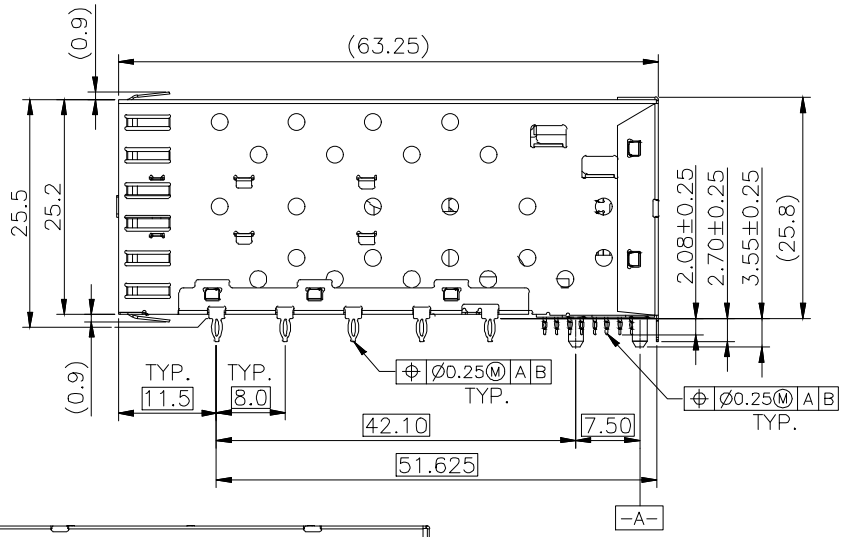

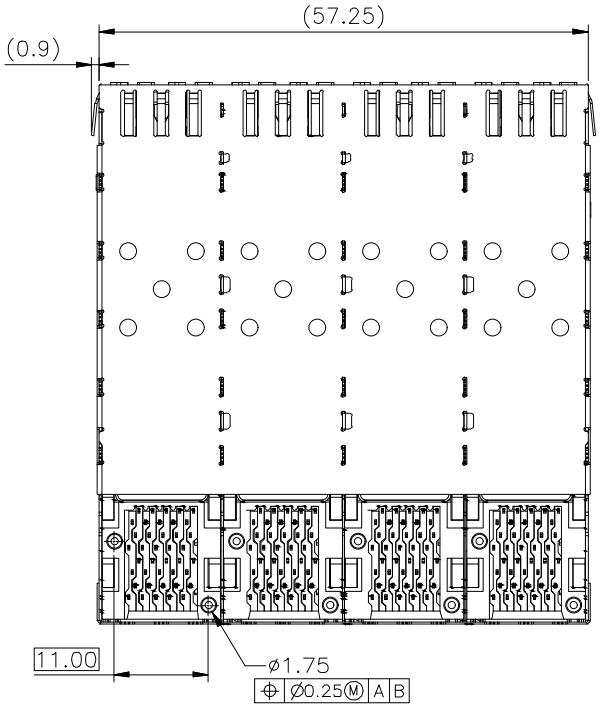

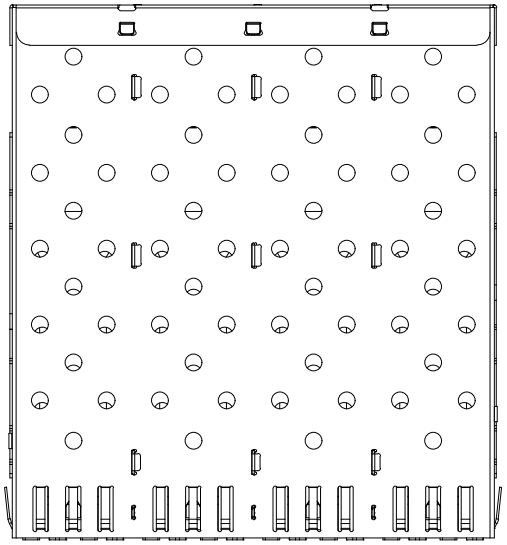

NOTES:

MATERIAL:
CAGE: COPPER ALLOY NI-PLATED,THICKNESS 0.25 MM
CONNECTOR:
PLASTIC HOUSING: HIGH TEMPERATURE LCP, UL94 V-0.
LIGHT PIPE: POLYCARBONATE; COLOR: CLEAR
SPRING: STAINLESS STEEL, THICKNESS 0.20mm
CONTACTS: PHOSPHOR BRONZE, THICKNESS 0.20mm
PLATING: 30μ" MIN. GOLD ON MATING AREA,
150μ" MIN. MATE TIN ON SOLDER TAILS.
PACKAGING: TRAY PACKAGING.
OPERATING TEMPERATURE: -40°C TO +85°C
STORAGE TEMPERATURE: -55°C TO +105°C

RoHS 2011/65/EU

TITLE	SFP 2X4 CAGE, SFP+CONNECTOR WITH EMI SPRING FINGER LIGHT PIPE	LINK-PP INT'L TECHNOLOGY CO., LIMITED
PART NO.	LP24AC01103T	GENNERAL TOLERANCE

APPROVE	CHECK	DRAW
LEO	JAMES	JAMES

◦ X±0.20	◦ X±1°	SCALE:1:1	UNIT:MM	SIZE:A4
◦ XX±0.15	◦ XX±5°		SHEET:1/4	REV:A
◦ XXX±0.10				

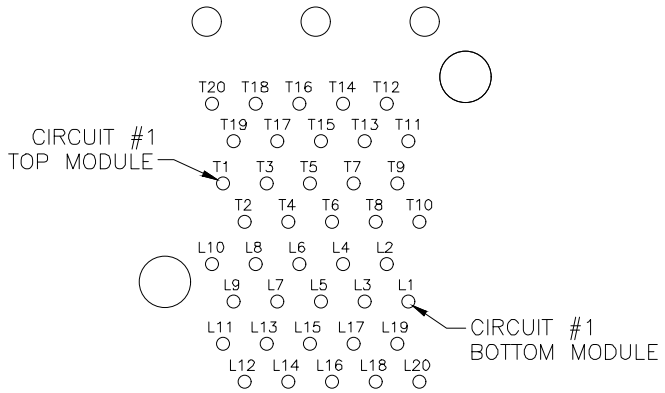

CIRCUIT NUMBERING
COMPONENT SIDE OF BOARD

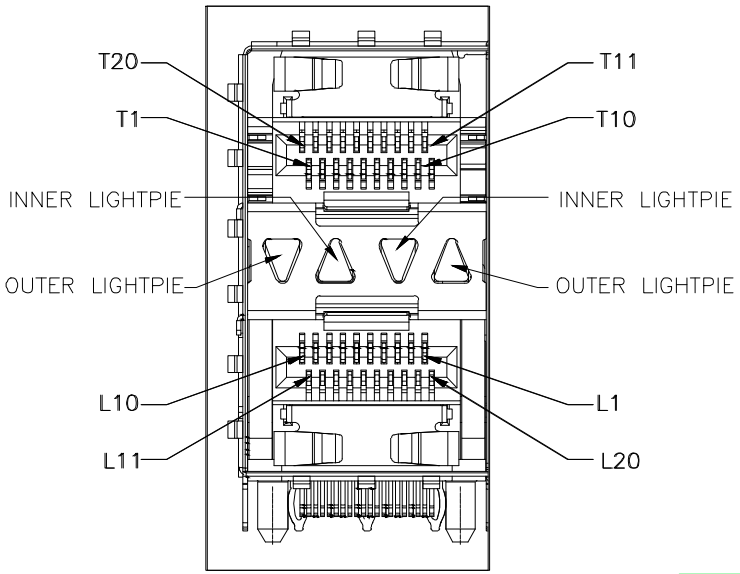

DETAIL A
CIRCUIT NUMBERING
AND LIGHTPIPE INDENTIRCATION

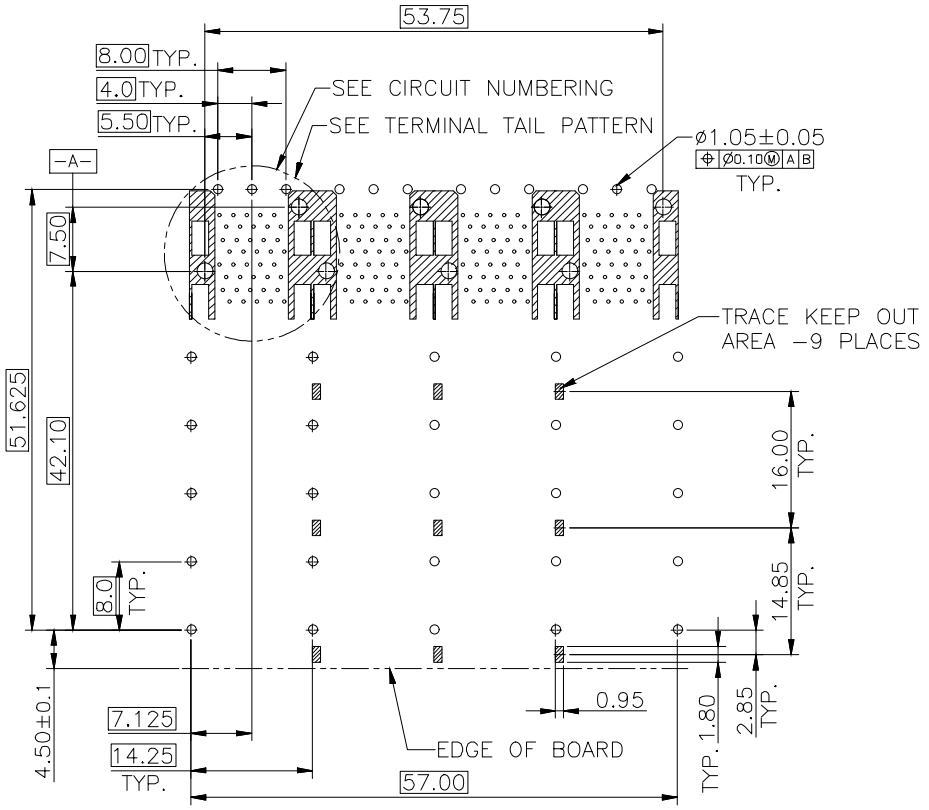

RECOMMENDED PCB LAYOUT – COMPONENT SIDE
RECOMMENDED PCB THICKNESS : 2.36MM(.093 INCH)
(MINIMUM PCB THICKNESS : 1.57)

THE ENTIRE AREA OF THE CONNECTOR FOOTPRINT
TO BE CONSIDERED THE KEEP OUT AREA FOR COMPONENTS
THIS AREA IS INDICATED BY THE DASHED LINE

RoHS 2011/65/EU

TITLE: SFP 2X4 CAGE, SFP+CONNECTOR WITH EMI SPRING FINGER LIGHT PIPE			LINK-PP INT'L TECHNOLOGY CO., LIMITED			
PART NO.: LP24AC01103T			GENNERAL TOLERANCE		UNIT:MM	SIZE:A4
APPROVE	CHECK	DRAW	◦ X±0.20	◦ X±1°	SCALE:1:1	SHEET:2/4 REV:A
LEO	JAMES	JAMES	◦ XX±0.15	◦ XX±5°		
			◦ XXX±0.10			

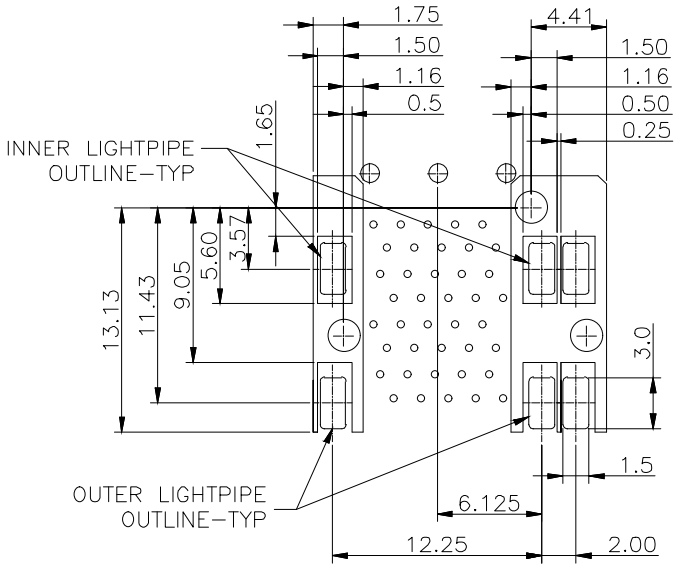

DETAIL–KEEPOUT ZONES

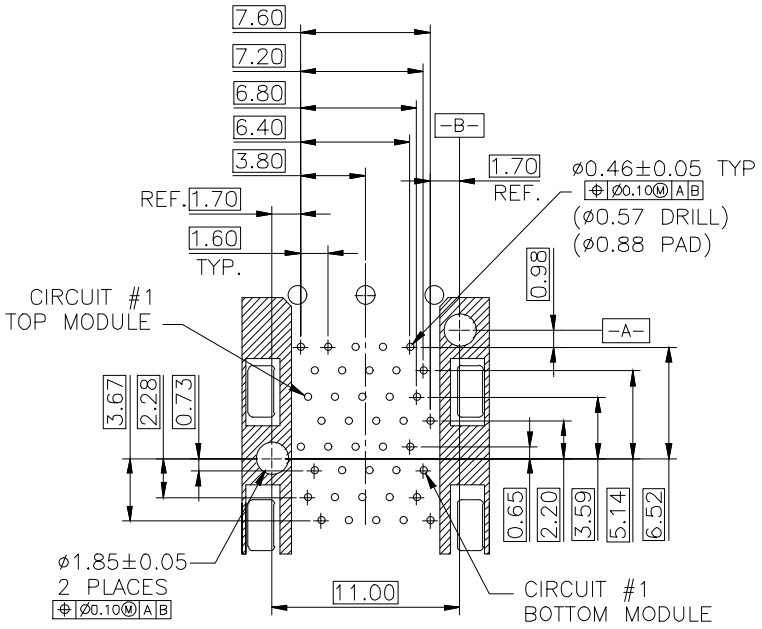

TERMINAL TAIL PATTERN

THE HATCHED AREA IN THIS VIEW INDICATES ZONES THAT ARE OCCUPIED BY THE PLASTIC HOUSING THAT SEATS AGAINST THE PCB AND BY THE VERTICAL METAL CAGE WALL THAT STOPS JUST SHORT OF THE PCB

RoHS 2011/65/EU

TITLE: SFP 2X4 CAGE, SFP+CONNECTOR WITH EMI SPRING FINGER LIGHT PIPE			LINK-PP INT'L TECHNOLOGY CO., LIMITED			
PART NO.: LP24AC01103T			GENNERAL TOLERANCE		UNIT:MM	SIZE:A4
APPROVE	CHECK	DRAW	◦ X±0.20	◦ X±1°	SCALE:1:1	SHEET:3/4 REV:A
LEO	JAMES	JAMES	◦ XX±0.15	◦ XX±5°		
			◦ XXX±0.10			

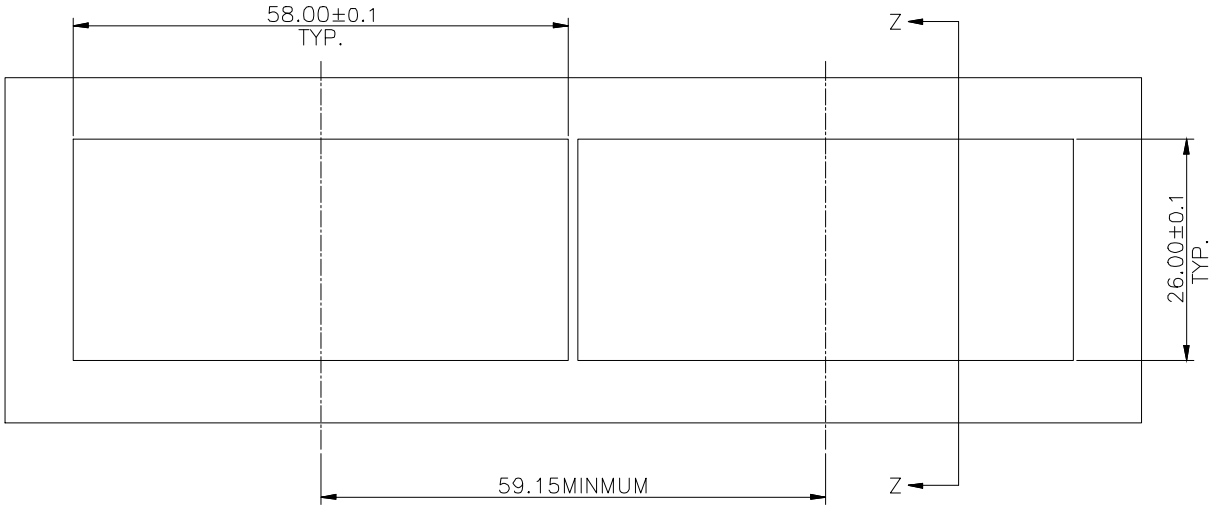

BEZEL CUT-OUT CENTER SPACING DETAIL

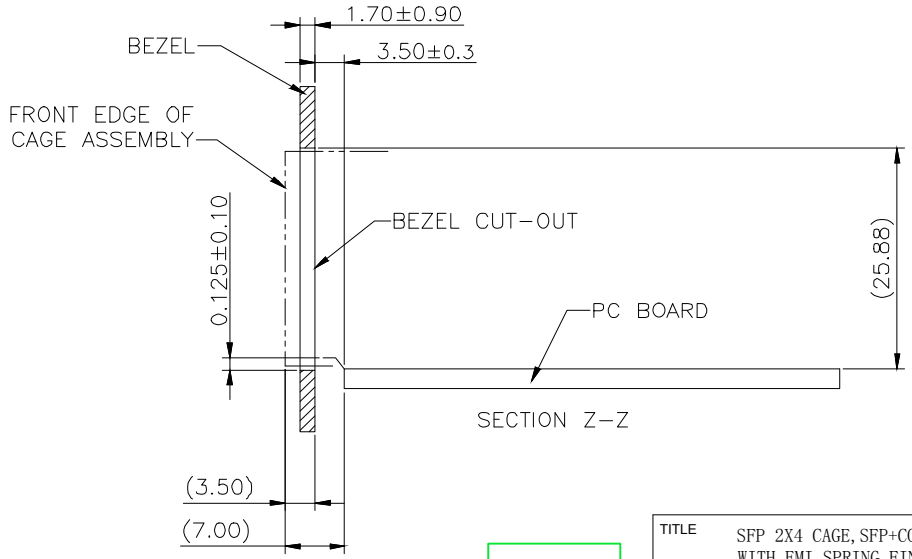

SECTION Z-Z

RoHS 2011/65/EU

TITLE	SFP 2X4 CAGE, SFP+CONNECTOR WITH EMI SPRING FINGER LIGHT PIPE	LINK-PP INT'L TECHNOLOGY CO., LIMITED
PART NO.	LP24AC01103T	GENNERAL TOLERANCE
APPROVE / CHECK / DRAW	LEO / JAMES / JAMES	◦ X±0.20, ◦ X±1°, ◦ XX±0.15, ◦ XX±5°, ◦ XXX±0.10
UNIT:MM	SIZE:A4	
SCALE:1:1	SHEET:4/4	REV:A