REV.	DESCRIPTION OF CHANGE	REVIEWED BY	ISSUE DATE
A	FIRST ISSUE	JULY	2021-12-07
A1	CUT THE CAGE AROUND THE CONNECTOR A1	XUAN	2026-06-23

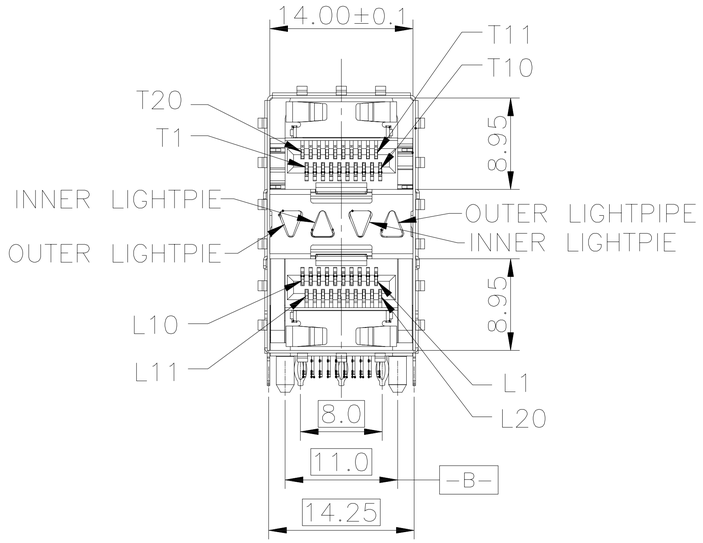

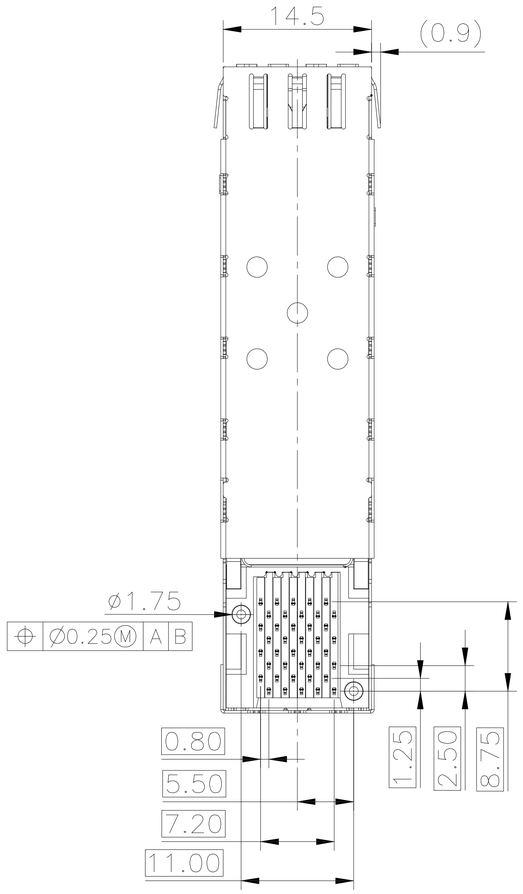

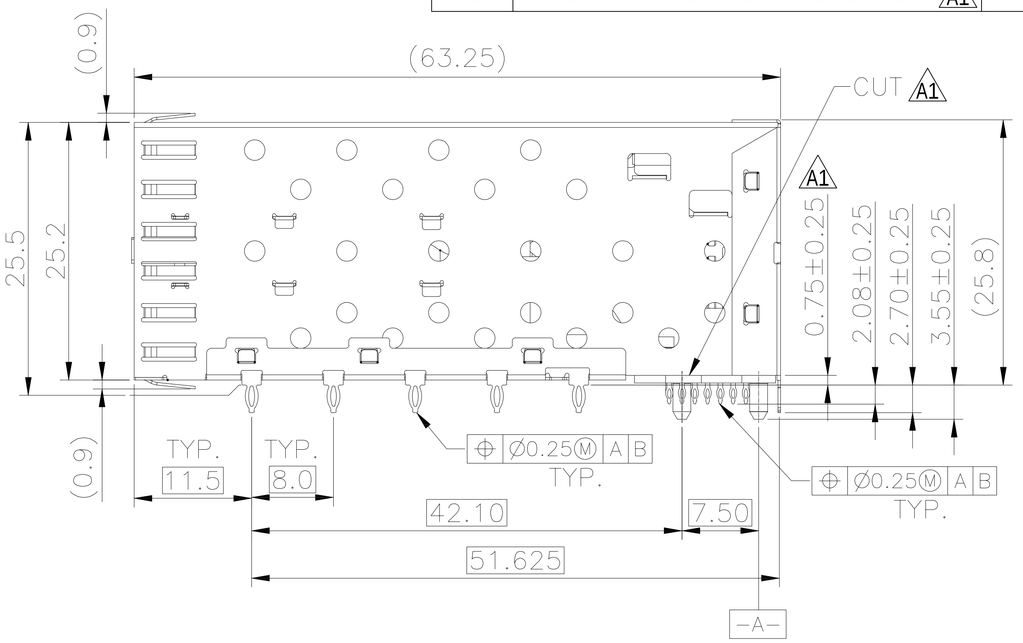

NOTES:

MATERIAL:
CAGE: STAINLESS STEEL,NI-PLATED,THICKNESS 0.25 MM
CONNECTOR:
PLASTIC HOUSING: HIGH TEMPERATURE LCP, UL94 V-0.
LIGHT PIPE: POLYCARBONATE; COLOR: CLEAR
SPRING: STAINLESS STEEL, THICKNESS 0.20mm
CONTACTS: PHOSPHOR BRONZE, THICKNESS 0.20mm
PLATING: 15μ" MIN. GOLD ON MATING AREA,
150μ" MIN. MATE TIN ON SOLDER TAILS.
PACKAGING: TRAY PACKAGING.
TEMPERATURE RANGE: -40°C TO +85°C
STORAGE TEMPERATURE: -55°C TO +105°C

RoHS 2011/65/EU

TITLE: SFP 2X1 CAGE WITH CONNECTOR & WITH EMI SPRING FINGER WITH LIGHT PIPE			LINK-PP INT'L TECHNOLOGY CO., LIMITED				
PART NO.: LP21AC01101Y			GENNERAL TOLERANCE			UNIT:MM	SIZE:A4
APPROVE	CHECK	DRAW	.X±0.25	.X±1°	SCALE:1:1	SHEET:1/3	REV:A1
XUAN	Kevin	Kevin	.XX±0.15	.XX±5°			
			.XXX±0.10				

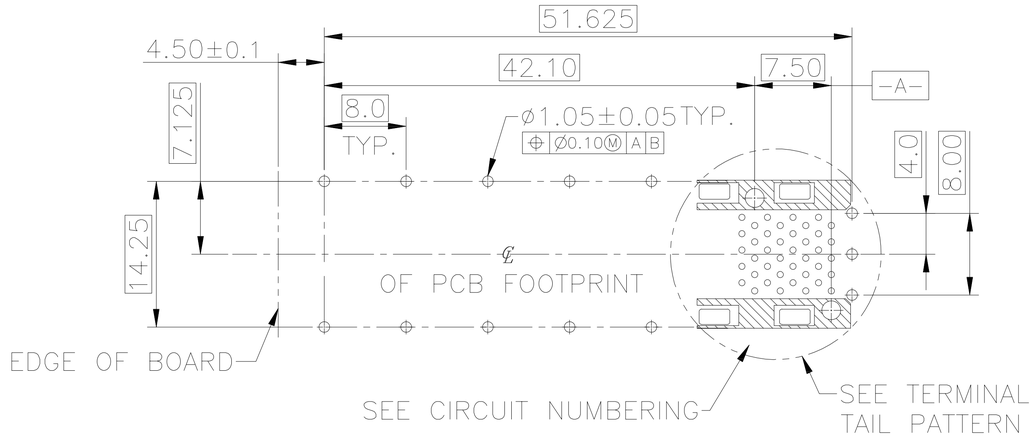

RECOMMENDED PCB LAYOUT – COMPONENT SIDE
RECOMMENDED PCB THICKNESS : 2.36MM(.093 INCH)
(MINIMUM PCB THICKNESS : 1.57)

THE ENTIRE AREA OF THE CONNECTOR FOOTPRINT
TO BE CONSIDERED THE KEEP OUT AREA FOR COMPONENTS
THIS AREA IS INDICATED BY THE DASHED LINE

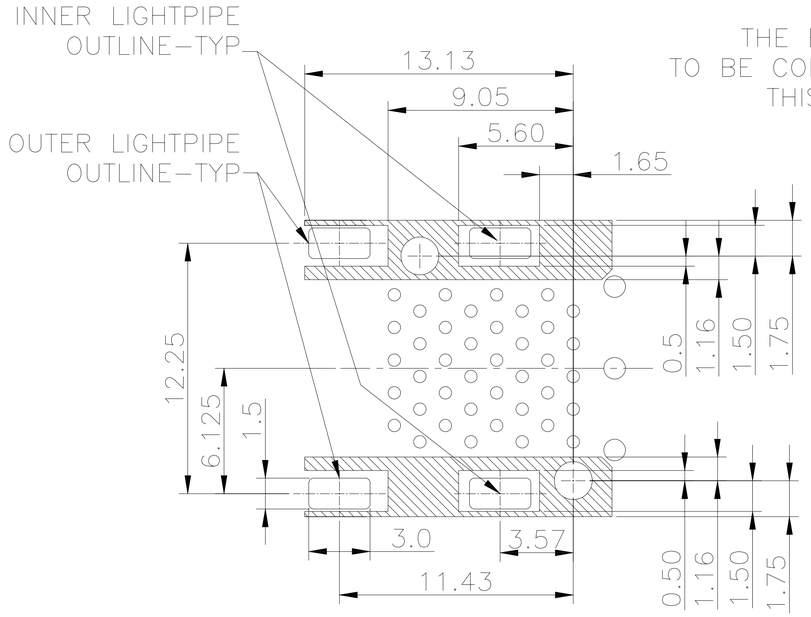

DETAIL–KEEPOUT ZONES

THE HATCHED AREA IN THIS VIEW INDICATES ZONES
THAT ARE OCCUPIED BY THE PLASTIC HOUSING THAT
SEATS AGAINST THE PCB AND BY THE VERTICAL METAL
CAGE WALL THAT STOPS JUST SHORT OF THE PCB

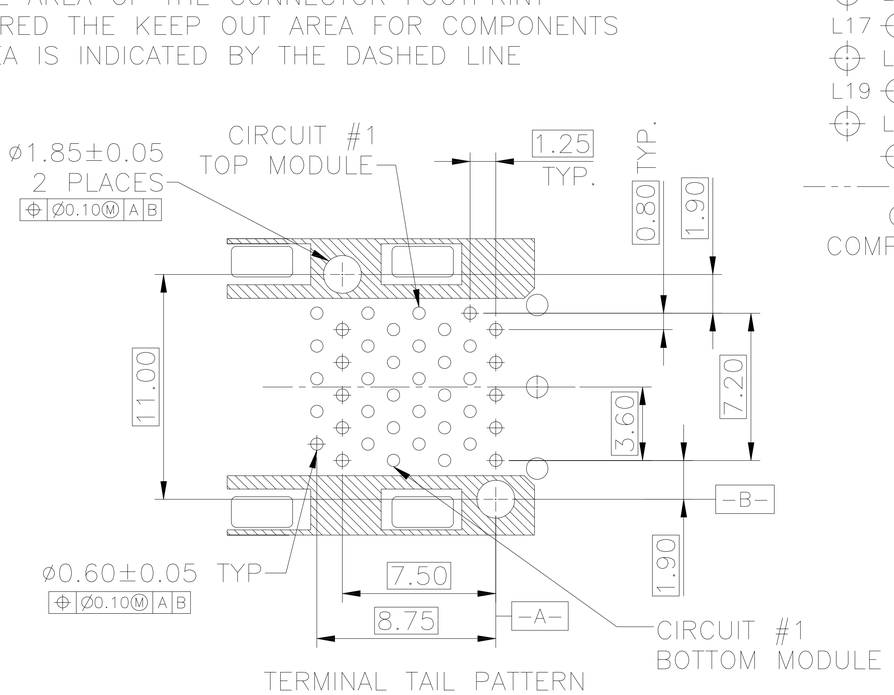

TERMINAL TAIL PATTERN
2:1

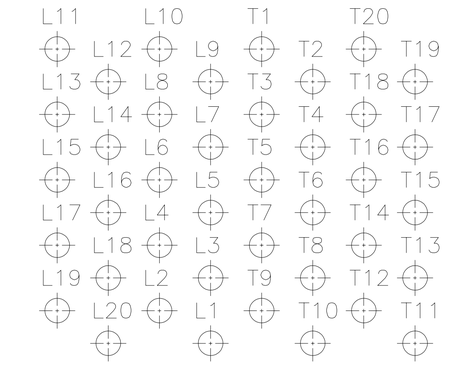

CIRCUIT NUMBERING
COMPONENT SIDE OF BOARD
4:1

RoHS
2011/65/EU

TITLE: SFP 2X1 CAGE WITH CONNECTOR & WITH EMI SPRING FINGER WITH LIGHT PIPE			LINK-PP INT'L TECHNOLOGY CO., LIMITED			
PART NO.: LP21AC01101Y			GENNERAL TOLERANCE		UNIT:MM	SIZE:A4
APPROVE	CHECK	DRAW	.X±0.25	.X±1°	SCALE:1:1	SHEET:2/3 REV:A1
XUAN	Kevin	Kevin	.XX±0.15	.XX±5°		
			.XXX±0.10			

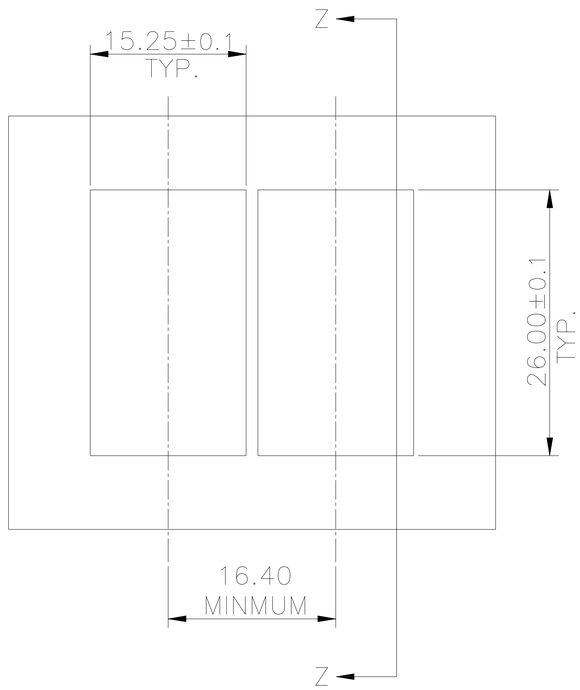

BEZEL CUT-OUT CENTER SPACING DETAIL

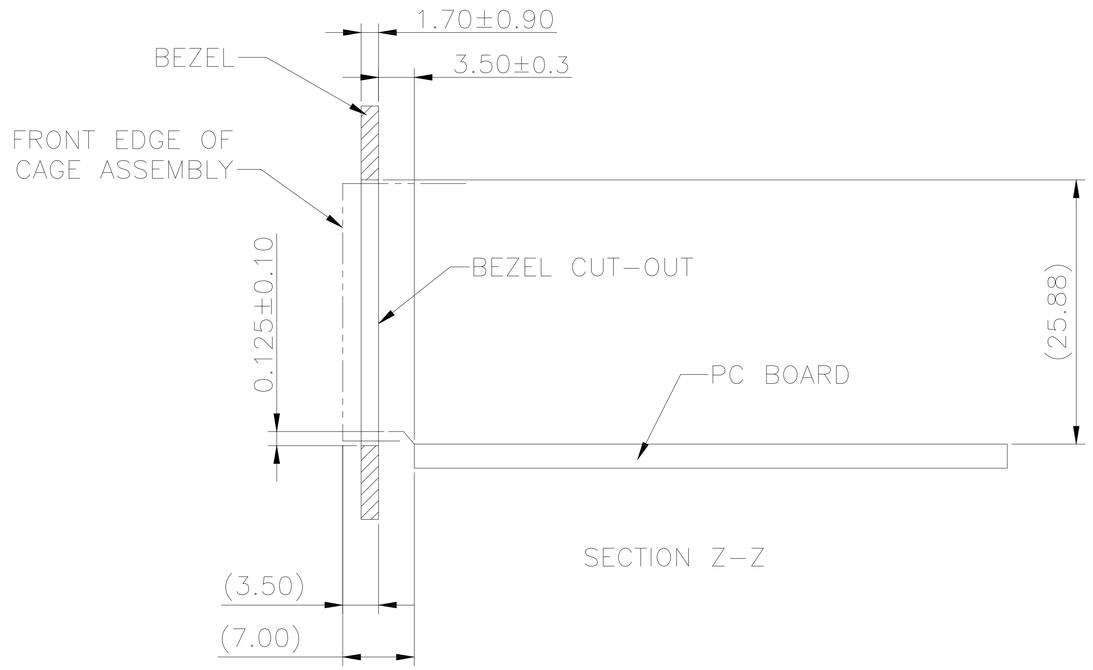

SECTION Z-Z

RoHS
2011/65/EU

TITLE: SFP 2X1 CAGE WITH CONNECTOR & WITH EMI SPRING FINGER WITH LIGHT PIPE			LINK-PP INT'L TECHNOLOGY CO., LIMITED				
PART NO.: LP21AC01101Y			GENNERAL TOLERANCE			UNIT:MM	SIZE:A4
APPROVE	CHECK	DRAW	.X±0.25	.X±1°	SCALE:1:1	SHEET:3/3	REV:A1
XUAN	Kevin	Kevin	.XX±0.15	.XX±5°			
			.XXX±0.10				