REV.	DESCRIPTION OF CHANGE	REVIEWED BY	ISSUE DATE
A	FIRST ISSUE	LEO	2022-07-12

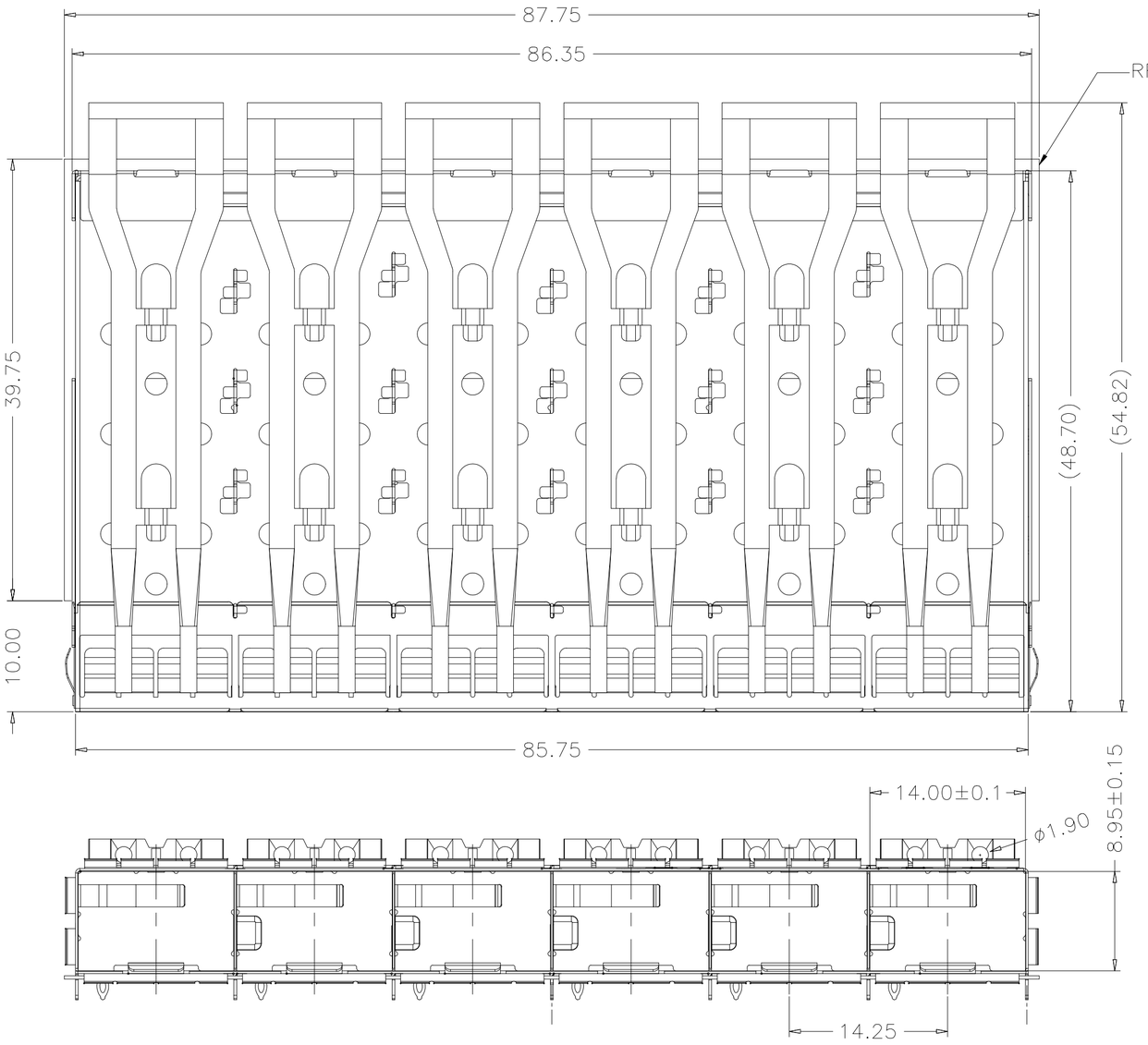

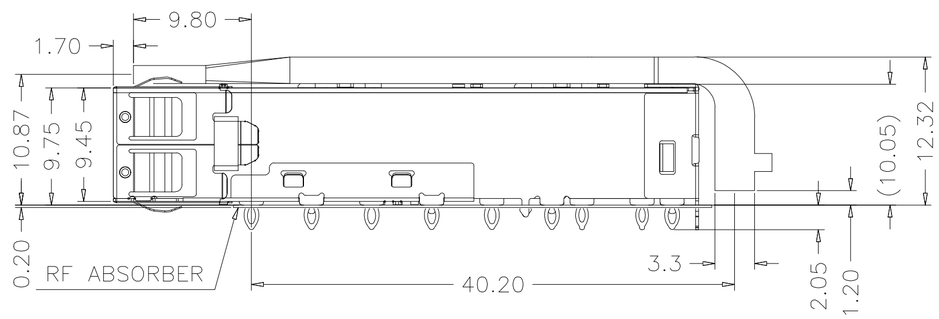

NOTES:

1.MATERIAL: COPPER ALLOY, THICKNESS 0.25mm
PCB GASKET : RF ABSORBER.

2.PACKAGING: TRAY PACKAGING

3.TEMPERATURE:
OPERATION : −40°C TO +85°C
STORAGE : −55°C TO +105°C

RoHS 2011/65/EU

TITLE	SFP28 1X6 CAGE WITH EMI SPRING FINGER LIGHT PIPE	LINK-PP INT'L TECHNOLOGY CO., LIMITED
PART NO.	LP16CC01100S	GENNERAL TOLERANCE

APPROVE	CHECK	DRAW
LEO	Kevin	Kevin

.X±0.25	.X±1°
.XX±0.15	.XX±5°
.XXX±0.10	

SCALE:1:1	UNIT:MM	SIZE:A4
	SHEET:1/5	REV:A

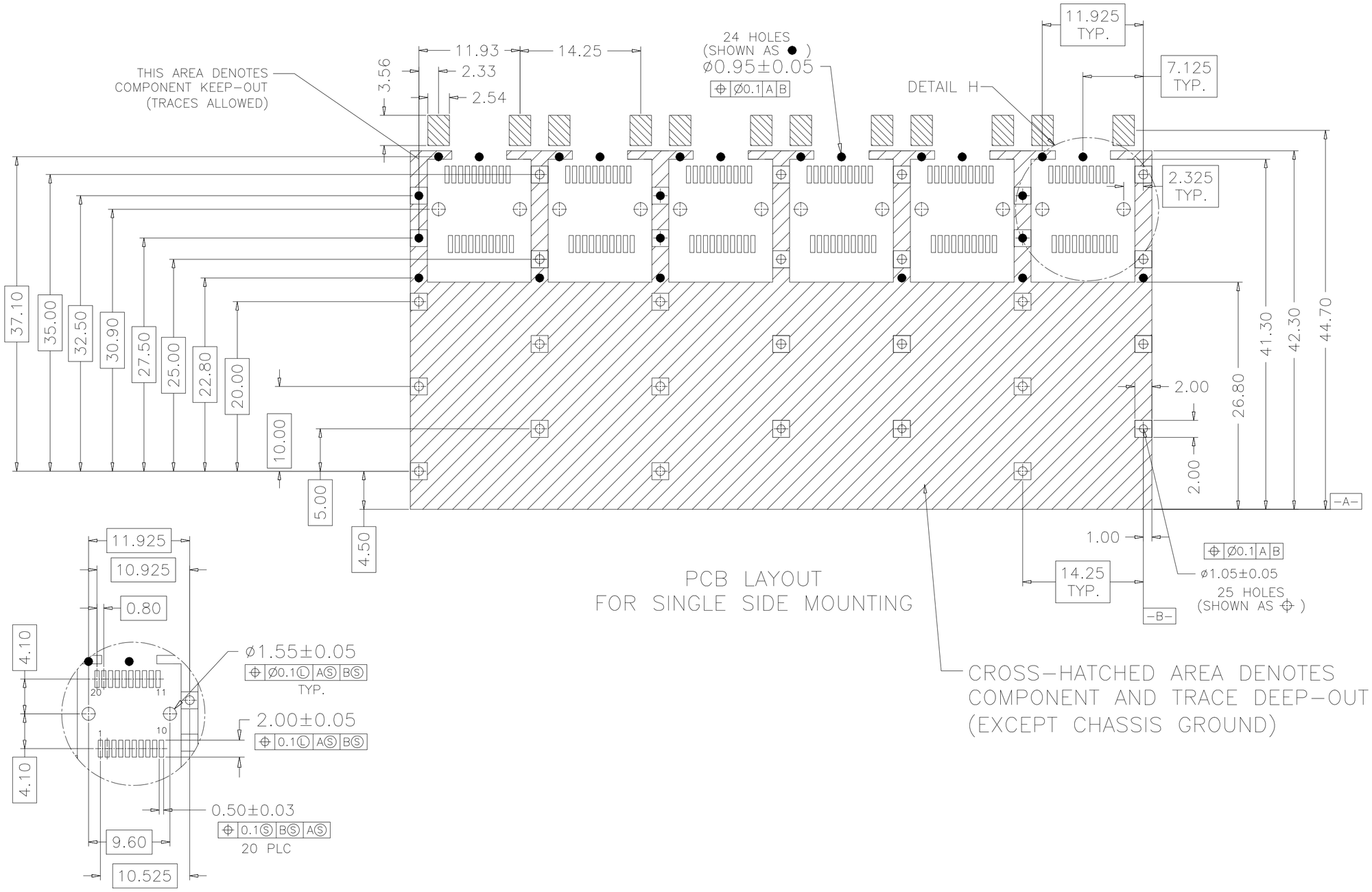

RoHS
2011/65/EU

TITLE: SFP28 1X6 CAGE WITH EMI SPRING FINGER LIGHT PIPE			LINK-PP INT'L TECHNOLOGY CO., LIMITED				
PART NO.: LP16CC01100S			GENNERAL TOLERANCE			UNIT:MM	SIZE:A4
APPROVE	CHECK	DRAW	.X±0.25	.X±1°	SCALE:1:1	SHEET:2/5	REV:A
LEO	Kevin	Kevin	.XX±0.15	.XX±5°			
			.XXX±0.10				

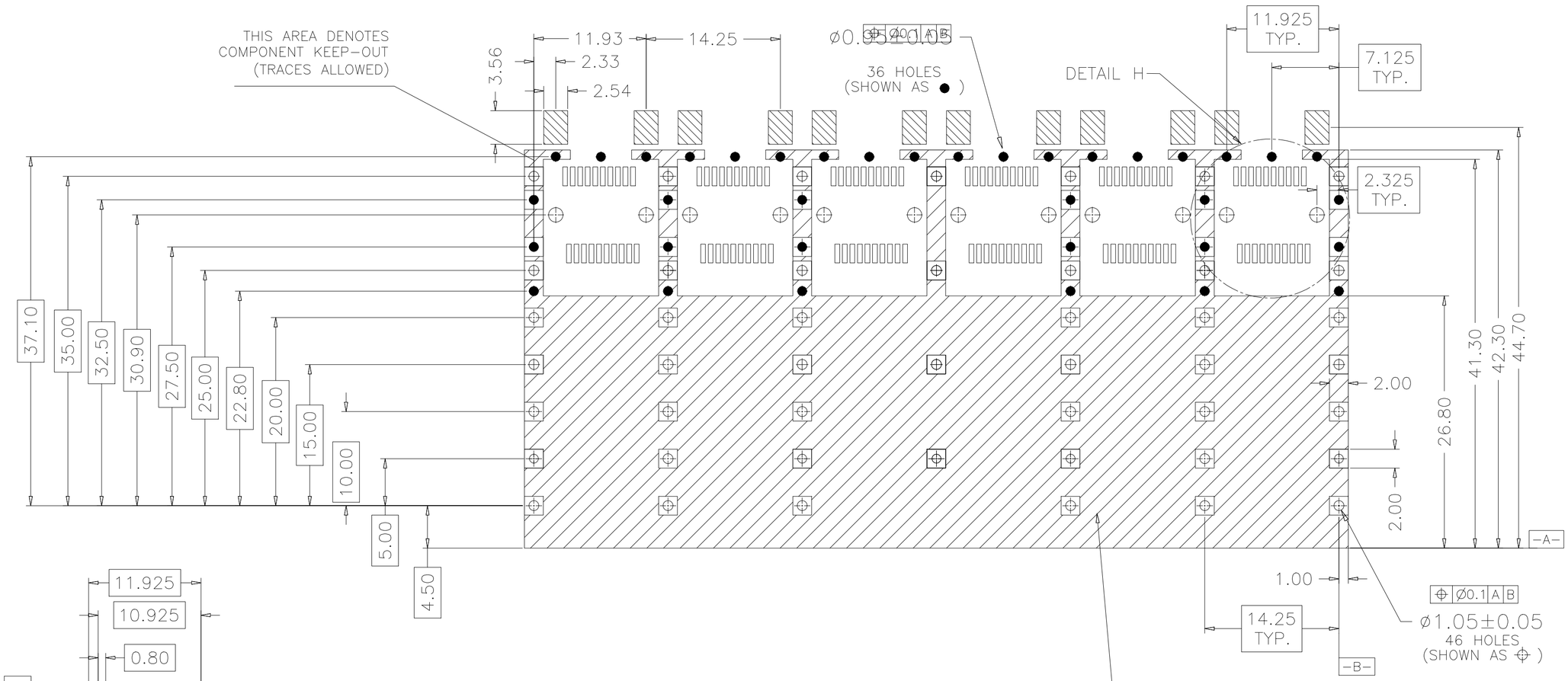

PCB LAYOUT
FOR BELLY TO BELLY MOUNTING

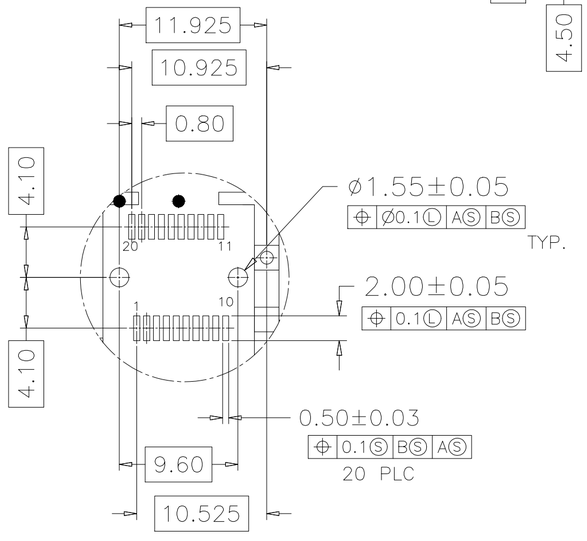

DETAIL H

RoHS 2011/65/EU

TITLE: SFP28 1X6 CAGE WITH EMI SPRING FINGER LIGHT PIPE			LINK-PP INT'L TECHNOLOGY CO., LIMITED				
PART NO.: LP16CC01100S			GENNERAL TOLERANCE			UNIT:MM	SIZE:A4
APPROVE	CHECK	DRAW	.X±0.25	.X±1°	SCALE:1:1	SHEET:3/5	REV:A
LEO	Kevin	Kevin	.XX±0.15	.XX±5°			
			.XXX±0.10				

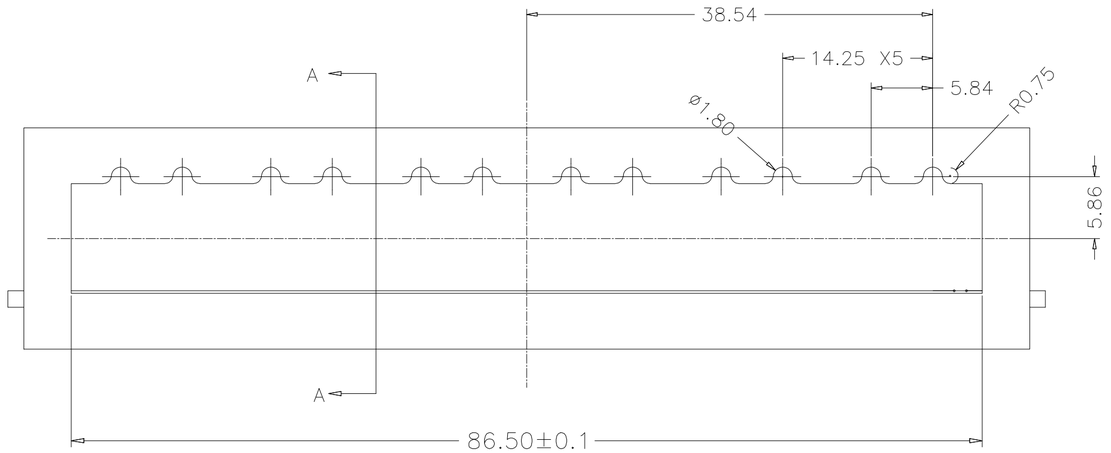

MOUNTED ON PC BOARD
SHOWN THRU RECOMMENDED BEZEL

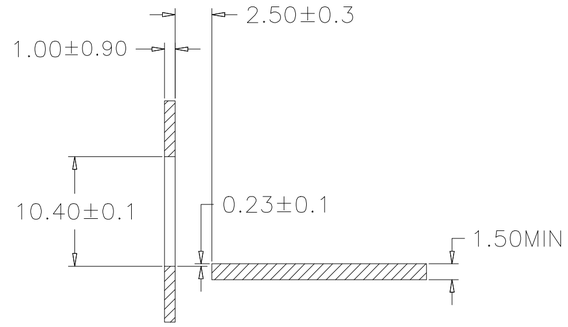

SECTION A–A

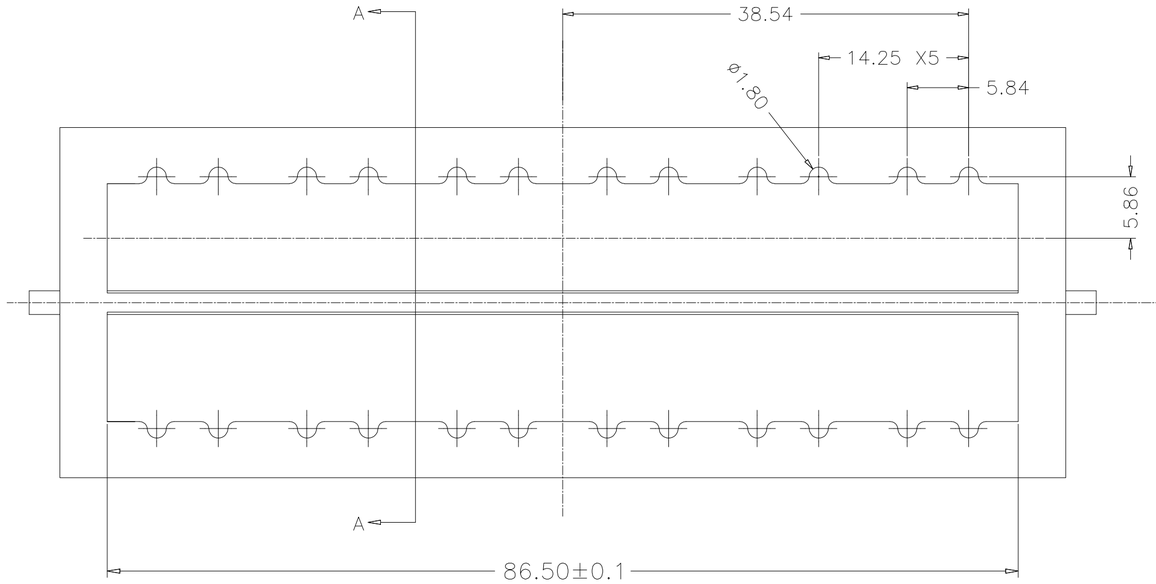

MOUNTED BELLY TO BELLY ON PC BOARD
SHOWN THRU RECOMMENDED BEZEL

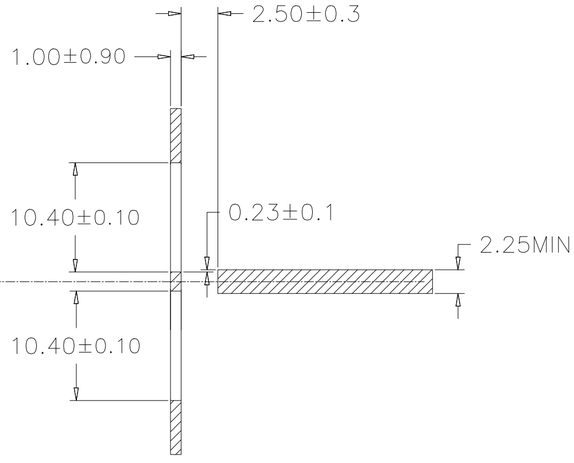

SECTION A–A

RoHS 2011/65/EU

TITLE: SFP28 1X6 CAGE WITH EMI SPRING FINGER LIGHT PIPE			LINK-PP INT'L TECHNOLOGY CO., LIMITED				
PART NO.: LP16CC01100S			GENNERAL TOLERANCE			UNIT:MM	SIZE:A4
APPROVE	CHECK	DRAW	.X±0.25	.X±1°	SCALE:1:1	SHEET:4/5	REV:A
LEO	Kevin	Kevin	.XX±0.15	.XX±5°			
			.XXX±0.10				

PACKAGE INFORMATION AND LABLE

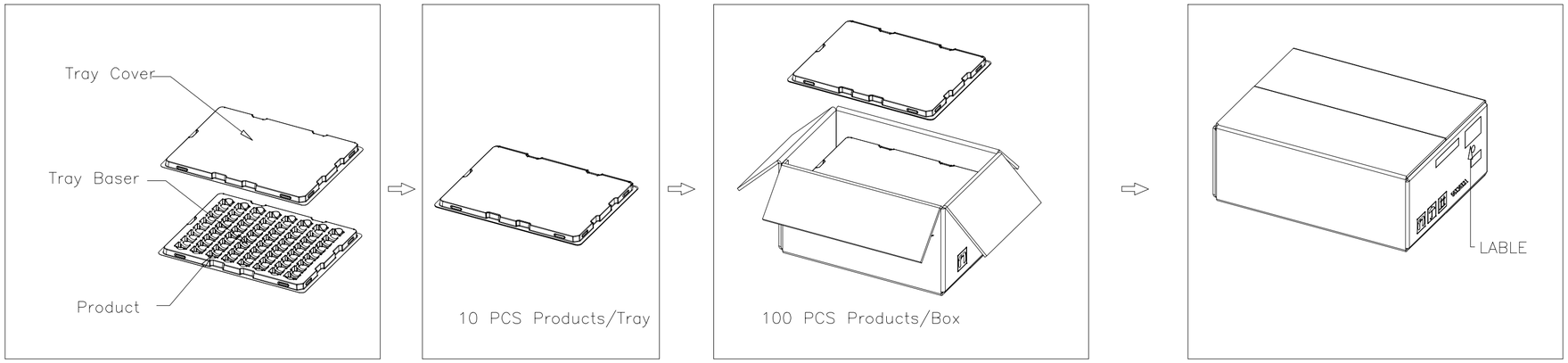

PACKING QUANTITY : 10 PCS FINISHED GOODS PER TRAY

10 TRAYS (100 PCS FINISHED GOODS) PER CARTON BOX

RoHS 2011/65/EU

TITLE: SFP28 1X6 CAGE WITH EMI SPRING FINGER LIGHT PIPE			LINK-PP INT'L TECHNOLOGY CO., LIMITED				
PART NO.: LP16CC01100S			GENNERAL TOLERANCE			UNIT:MM	SIZE:A4
APPROVE	CHECK	DRAW	.X±0.25 .XX±0.15 .XXX±0.10	.X±1° .XX±5°	SCALE:1:1	SHEET:5/5	REV:A
LEO	Kevin	Kevin					