REV.	DESCRIPTION OF CHANGE	REVIEWED BY	ISSUE DATE
A	FIRST ISSUE	LEO	2021-09-03
A1	EMI STRUCTURE CHANGE	JULY	2025-03-25

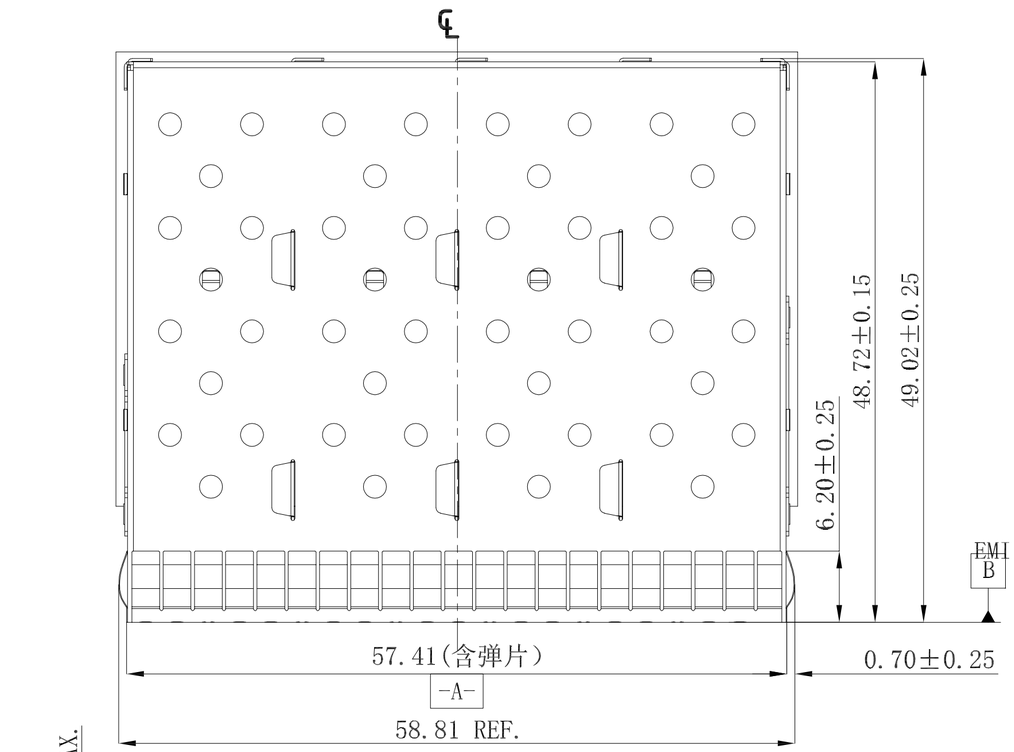

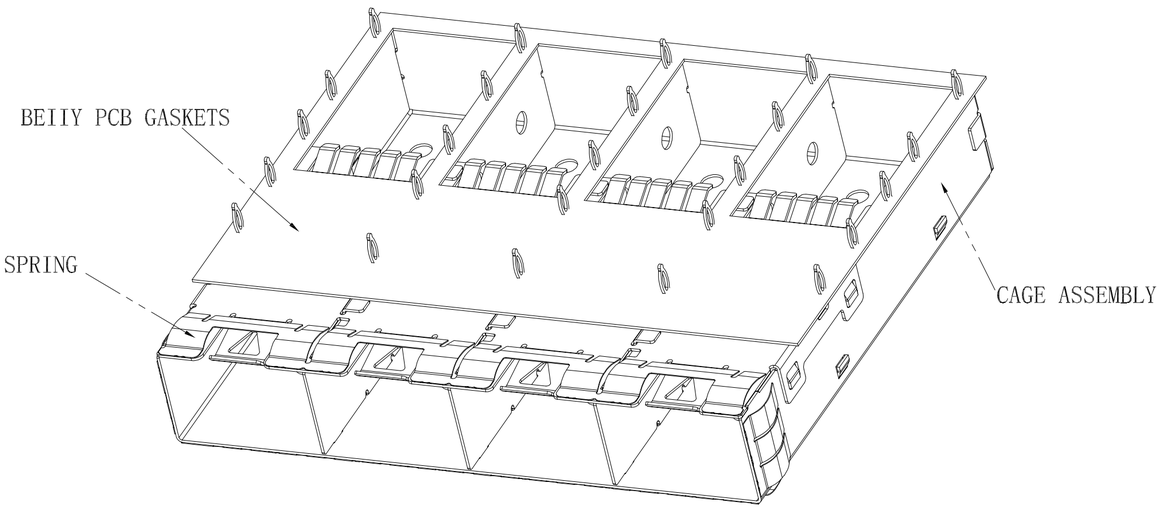

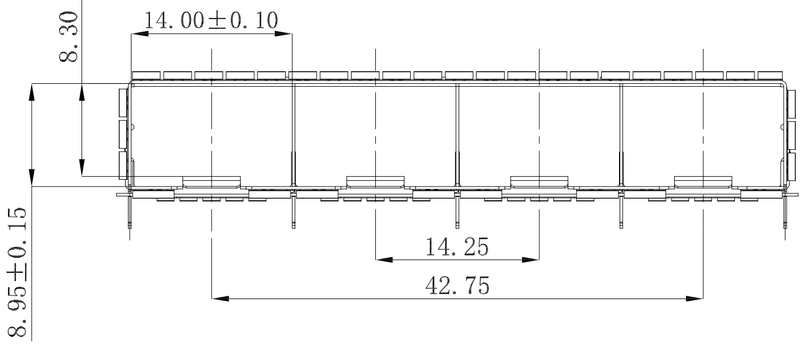

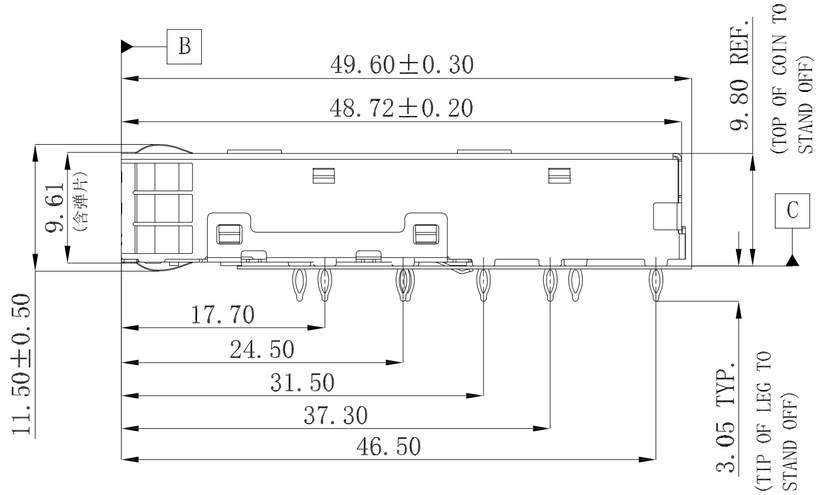

NOTES :
MATERIAL:
1.CAGE BODY:NICKEL SILVER THICKNESS T=0.25mm THICKNESS PLATING 30U" MIN NICKEL.
2.EMI SPRING:PHOSPHOR BRONZE T=0.08mm THICKNESS PLATING 30U" MIN NICKEL
3.BEIIY PCB GASKETS:CIATED POLYMIDE.
ELECTRICAL:
1.VOLTAGE RATING:30V DC/AC(RMS)MAX.
2.CURRENT RATING:0.5 AmP MAX.
3.CONTACT RESISTANCE:50 MILLIOHMS MAX.
4.INSULATION RESISTANCE:1000 Mohms MIN.
5.DIELECTRIC WITHSTANDING VOLTAGE:300 VAC/MINIMUM.
6.THE CONTROL OF HAZARDOUS SUBSTANCES FOLLOWS THE ROHS DIRECTIVE
MECHANICAL:
1.INSERTFORCE/EXTRACTION FORCE:40N MAXIMUM/11.5N MAXIMUM.
2.DURABILITY:100 CYCLES MIN.
TEMPERATURE :
OPERATION:-40℃ ～ +85℃
STORAGE :-40℃ ～ +85℃

RoHS 2011/65/EU

TITLE	SFP28 1X4 CAGE WITH EMI SPRING FINHER	LINK-PP INT'L TECHNOLOGY CO., LIMITED
PART NO.	LP14CC01000	GENNERAL TOLERANCE: .X±0.25, .XX±0.15, .XXX±0.10; .X±1°, .XX±5°
UNIT:MM	SIZE:A4	SCALE:1:1
SHEET:1/4	REV:A1	

APPROVE	CHECK	DRAW
LEO	Kevin	Kevin

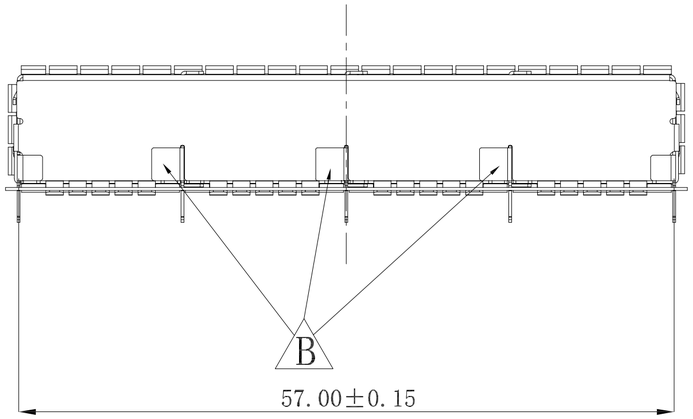

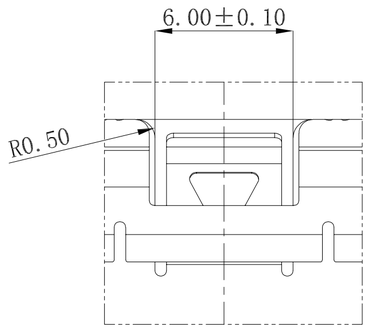

DETAIL:C
SCALE:4:1

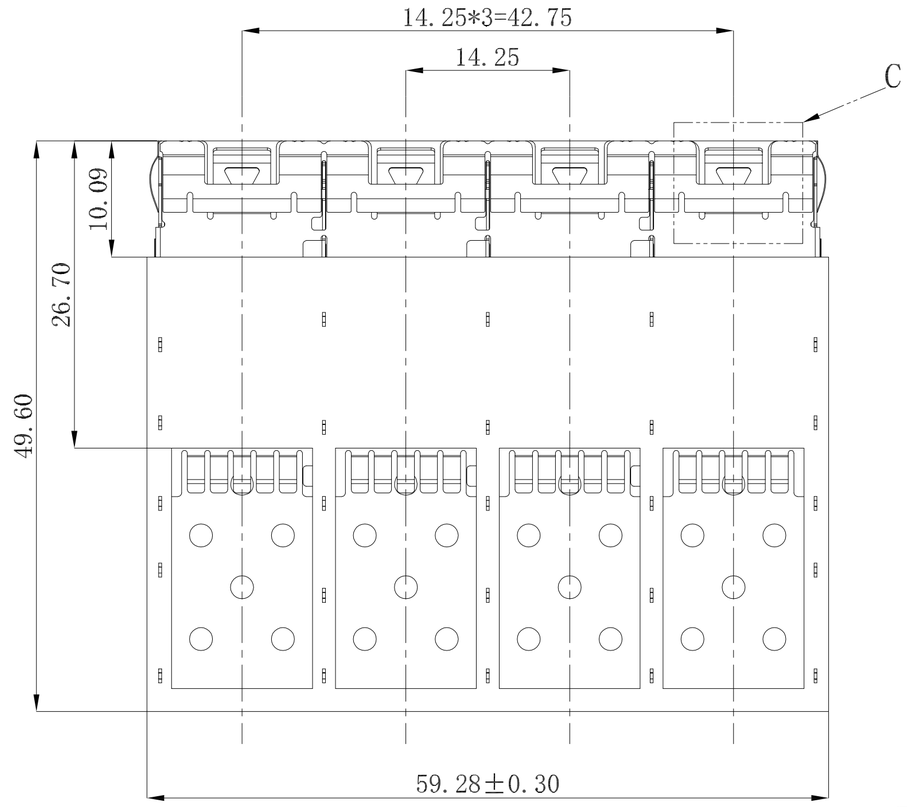

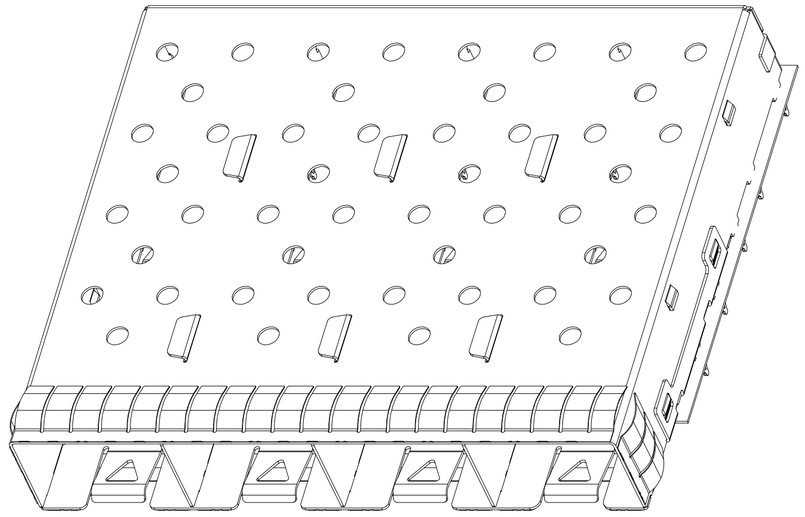

RoHS 2011/65/EU

TITLE: SFP28 1X4 CAGE WITH EMI SPRING FINHER			LINK-PP INT'L TECHNOLOGY CO., LIMITED				
PART NO.: LP14CC01000			GENNERAL TOLERANCE			UNIT:MM	SIZE:A4
APPROVE	CHECK	DRAW	.X±0.25	.X±1°	SCALE:1:1	SHEET:2/4	REV:A1
LEO	Kevin	Kevin	.XX±0.15	.XX±5°			
			.XXX±0.10				

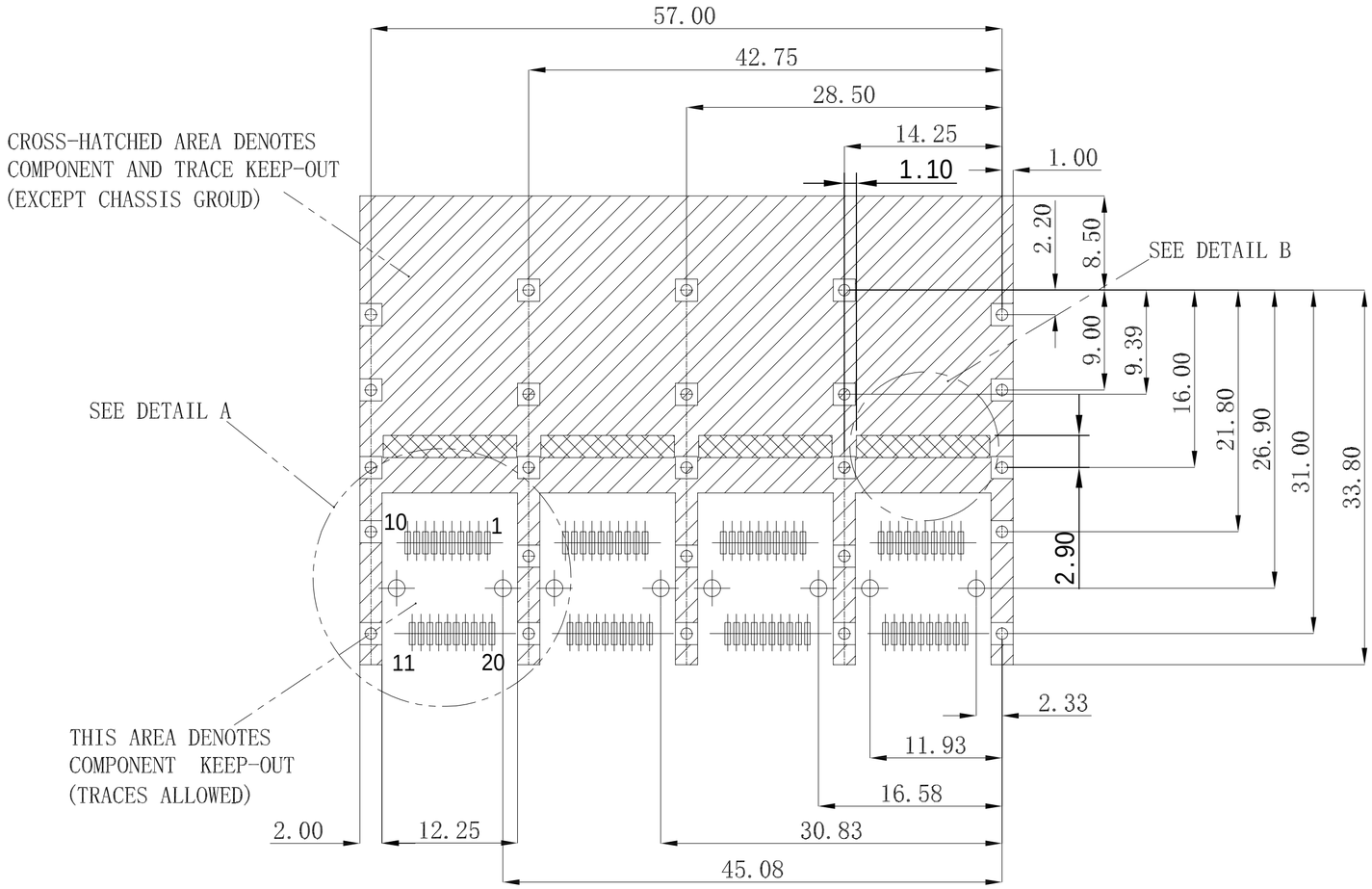

PCB LAYOUT THICKNESS=3.00mm (TOP VIEW)

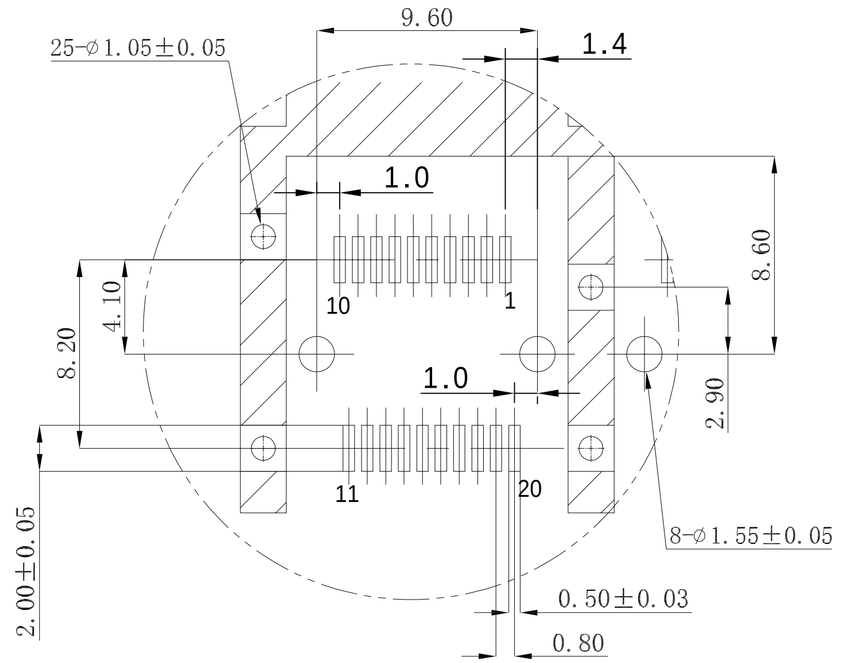

SEE DETAIL A

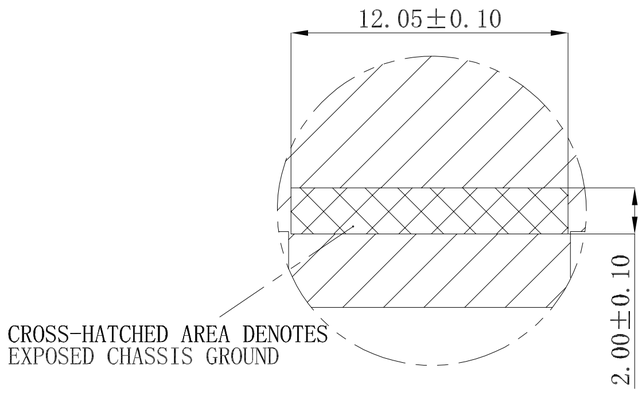

SEE DETAIL B

RoHS 2011/65/EU

TITLE: SFP28 1X4 CAGE WITH EMI SPRING FINHER			LINK-PP INT'L TECHNOLOGY CO., LIMITED				
PART NO.: LP14CC01000			GENNERAL TOLERANCE			UNIT:MM	SIZE:A4
APPROVE	CHECK	DRAW	.X±0.25	.X±1°	SCALE:1:1	SHEET:3/4	REV:A1
LEO	Kevin	Kevin	.XX±0.15	.XX±5°			
			.XXX±0.10				

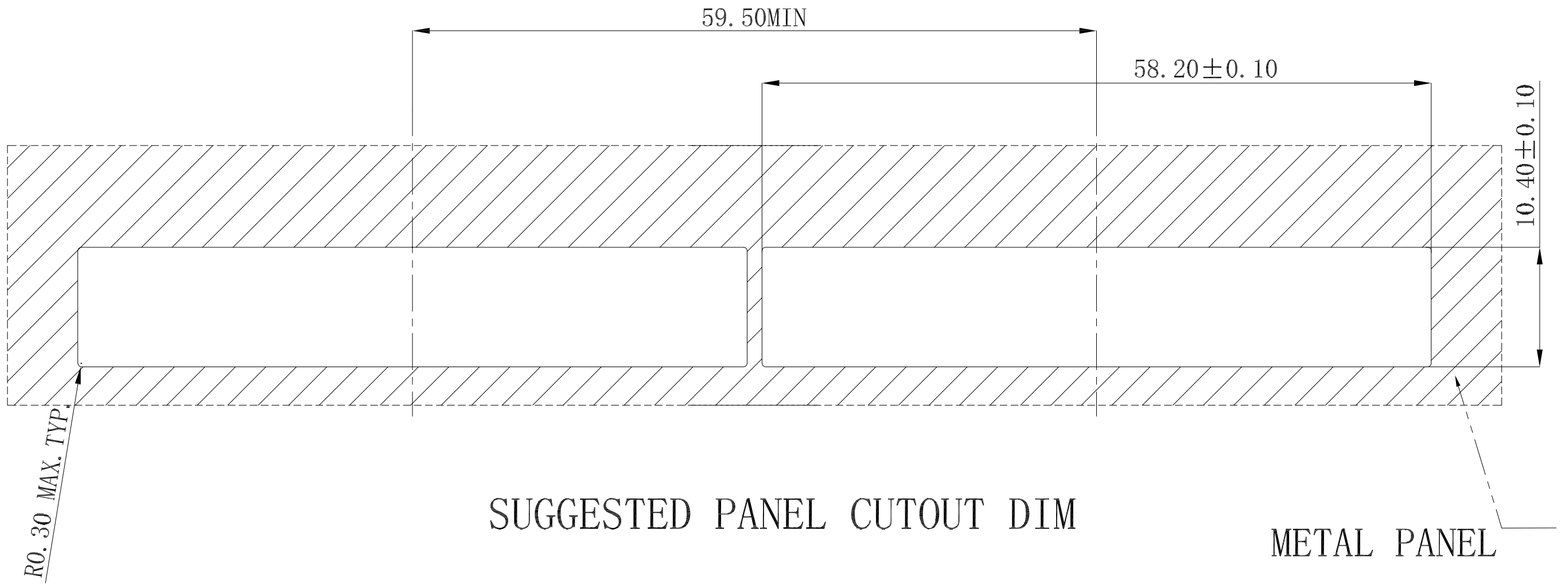

SUGGESTED PANEL CUTOUT DIM

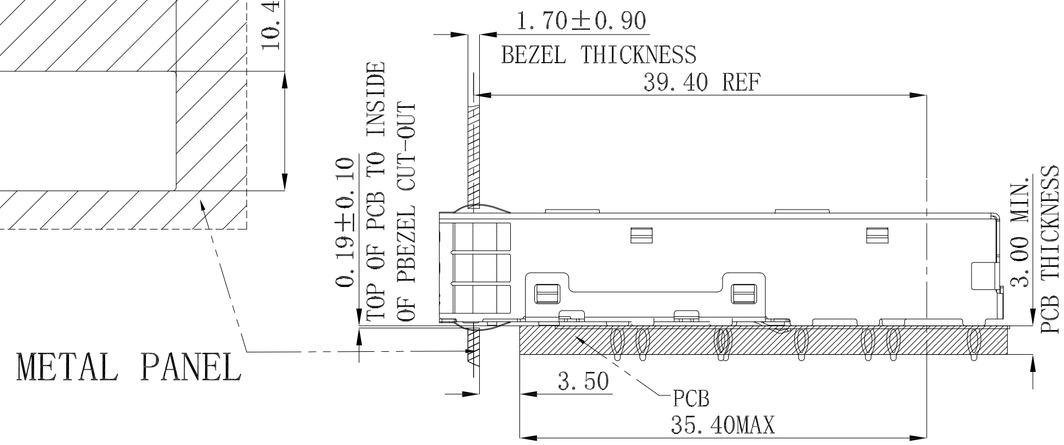

RoHS 2011/65/EU

TITLE: SFP28 1X4 CAGE WITH EMI SPRING FINHER			LINK-PP INT'L TECHNOLOGY CO., LIMITED				
PART NO.: LP14CC01000			GENNERAL TOLERANCE			UNIT:MM	SIZE:A4
APPROVE	CHECK	DRAW	.X±0.25	.X±1°	SCALE:1:1	SHEET:4/4	REV:A1
LEO	Kevin	Kevin	.XX±0.15	.XX±5°			
			.XXX±0.10				