REV	DESCRIPTION OF CHANGE	REVIEWED BY	ISSUE DATE
A	FIRST ISSUE	LEO	2020-02-13

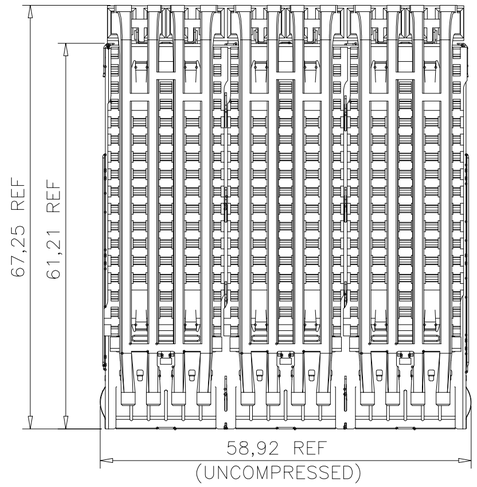

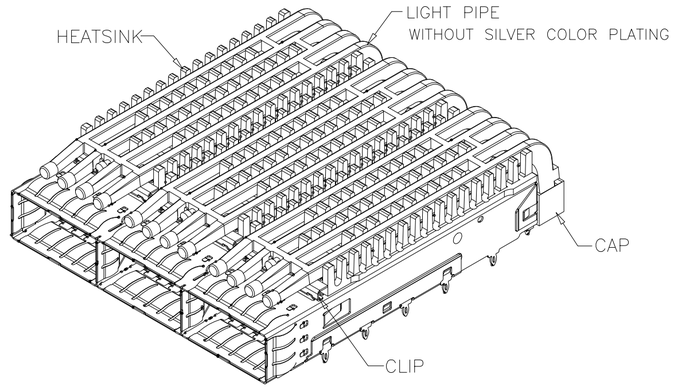

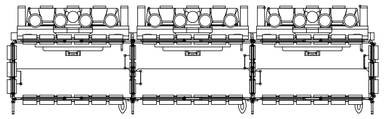

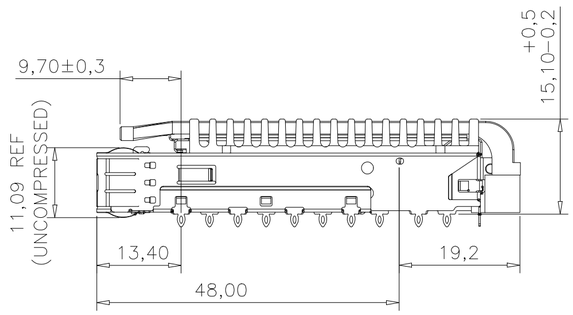

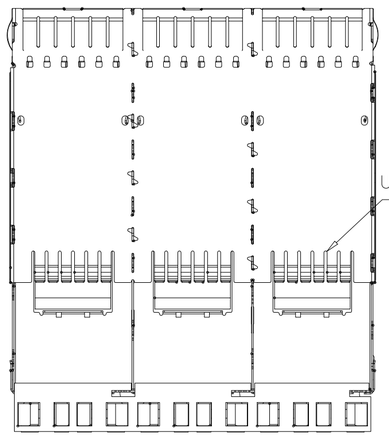

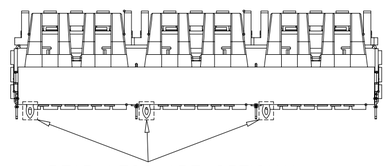

1. MATERIALS:
   CAGE UP: STAINLESS STEEL, 0.25 THICKNESS
   CAGE DOWN: STAINLESS STEEL, 0.25 THICKNESS
   PARTITION: STAINLESS STEEL
   EMI FINGERS: STAINLESS STEEL
   HEATSINK: ALUMINUM
   HEATSINK CLIP: STAINLESS STEEL
   LIGHT PIPE MATERIAL: CLEAR POLYCARBONATE
   CAP: HIGH TEMPERATURE THERMOPLASTIC 94V-0,BLACK

2. SURFACE FINISH:
   BODY CAGE: CLEANING
   EMI SPRING FINISH: CLEANING AND HOLE SEALING
   HEATSINK FINISH: BLACK ANODIZED
   HEATSINK CLIP FINISH: CLEANING

3. MATE WITH QSFP MSA COMPATIBLE TRANSCEIVER.

4. INSIDE SURFACE OF CASKET WHEN FULLY COMPRESSED.

5. REFERENCE DOCUMENTS:
   PRODUCT SPECIFICATION: SFF-8663

6. THIS PRODUCT COMPLY TO ROHS DIRECTIVE 2011/65/EU.

RoHS 2011/65/EU

TITLE: QSFP28 1X3 CAGE WITH EMI SPRING FINGER LIGHT PIPE HEAT SINK			LINK-PP INT'L TECHNOLOGY CO., LIMITED				
PART NO. LP13FC011I0S			GENNERAL TOLERANCE			UNIT:MM	SIZE:A4
APPROVE	CHECK	DRAW	◦ X±0.20	◦ X±1°	SCALE:1:1	SHEET:1/5	REV:A
LEO	JAMES	JAMES	◦ XX±0.15	◦ XX±5°			
			◦ XXX±0.10				

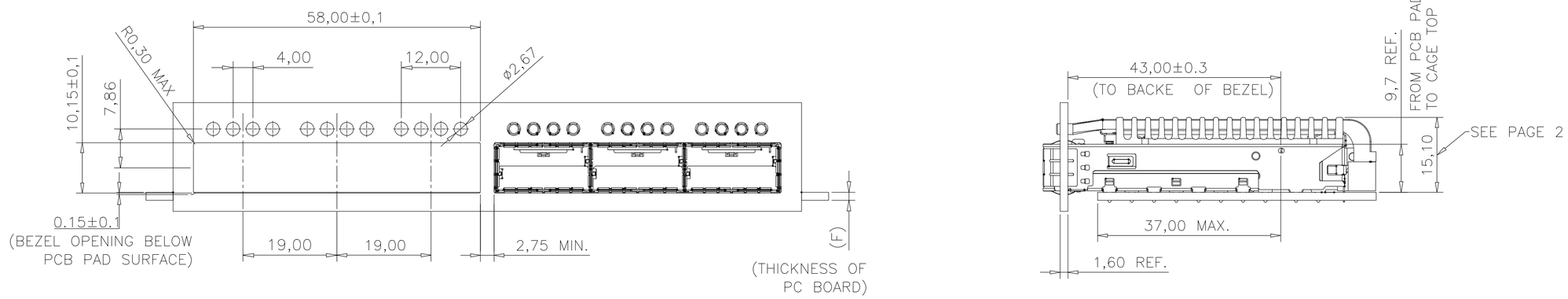

BEZEL AND BOARD POSITION DIMENSION FOR SINGLE SIDE MOUNTING

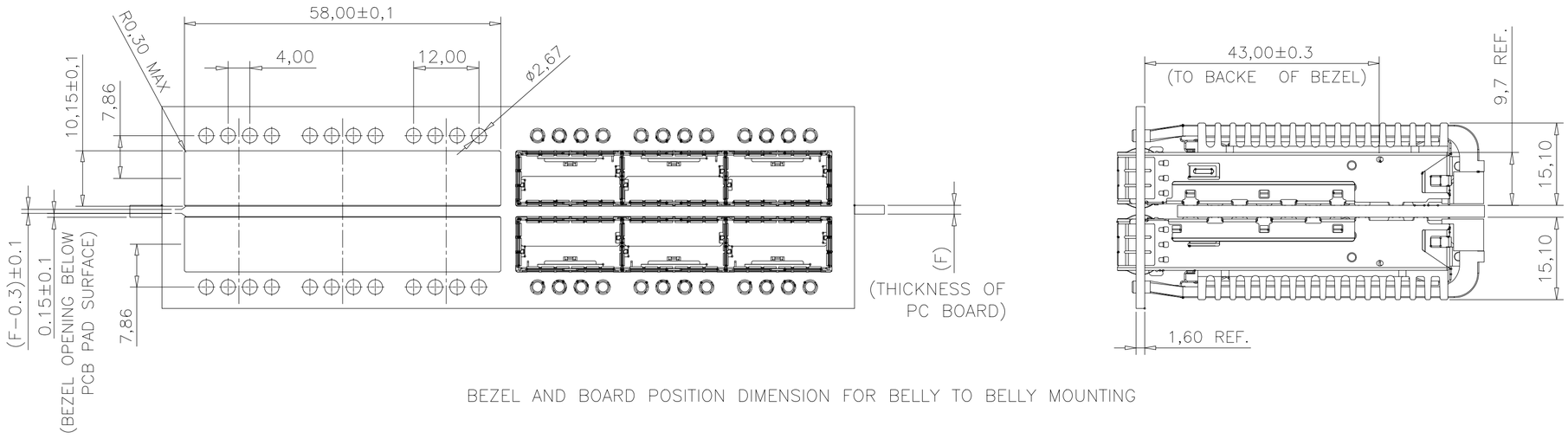

BEZEL AND BOARD POSITION DIMENSION FOR BELLY TO BELLY MOUNTING

NOTES:

1. THE NORMAL THICKNESS OF CUSTOMER SUPPLIED PC BOARD.(DIM. "F")
   SINGLE SIDED PC BOARD THICKNESS: 1.60mm MIN.
   BELLY TO BELLY PC BOARD MIN. THICKNESS: 3.0mm MIN.
2. GENERAL TOLERANCE: ±0.05.

RoHS 2011/65/EU

TITLE: QSFP28 1X3 CAGE WITH EMI SPRING FINGER LIGHT PIPE HEAT SINK			LINK-PP INT'L TECHNOLOGY CO., LIMITED			
PART NO.: LP13FC011I0S			GENNERAL TOLERANCE		UNIT:MM	SIZE:A4
APPROVE	CHECK	DRAW	◦ X±0.20	◦ X±1°	SCALE:1:1	SHEET:2/5	REV:A
LEO	JAMES	JAMES	◦ XX±0.15	◦ XX±5°			
			◦ XXX±0.10			

	THE DIMENSION FOR MATING BEZEL (UNIT: mm)						
CODE	L/P APPEARANCE	L/P CUT-OUT	L/P PITCH (FRONT)	L/P PITCH (REAR)	L/P HEIGHT	BEZEL THICKNESS	LED HEIGHT	REMARK
0	NO L/P							WITHOUT LIGHT PIPE
A	ROUND	ø2.67	4.00(Equal)	1,4=15.75 2,3=3.40	7.86	1.60	0.8~1.1	APPLIES TO QUAD L/P
		①	②	③	④	⑤	⑥	

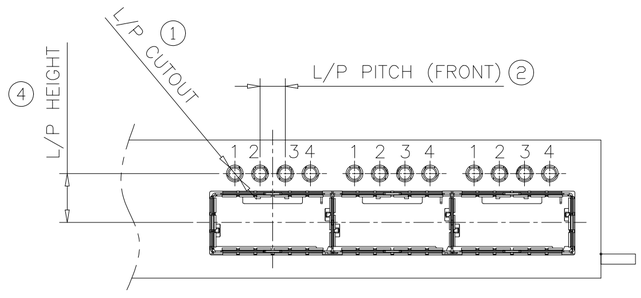

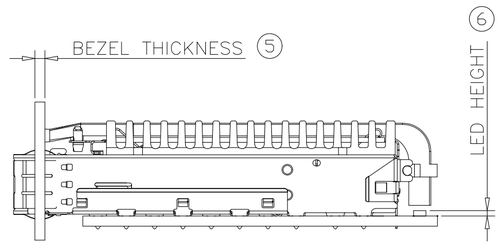

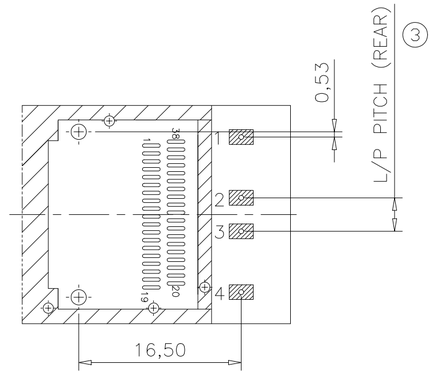

RoHS 2011/65/EU

TITLE: QSFP28 1X3 CAGE WITH EMI SPRING FINGER LIGHT PIPE HEAT SINK			LINK-PP INT'L TECHNOLOGY CO., LIMITED			
PART NO.: LP13FC011I0S			GENNERAL TOLERANCE		UNIT:MM	SIZE:A4
APPROVE	CHECK	DRAW	◦ X±0.20	◦ X±1°	SCALE:1:1	SHEET:3/5	REV:A
LEO	JAMES	JAMES	◦ XX±0.15	◦ XX±5°			
			◦ XXX±0.10				

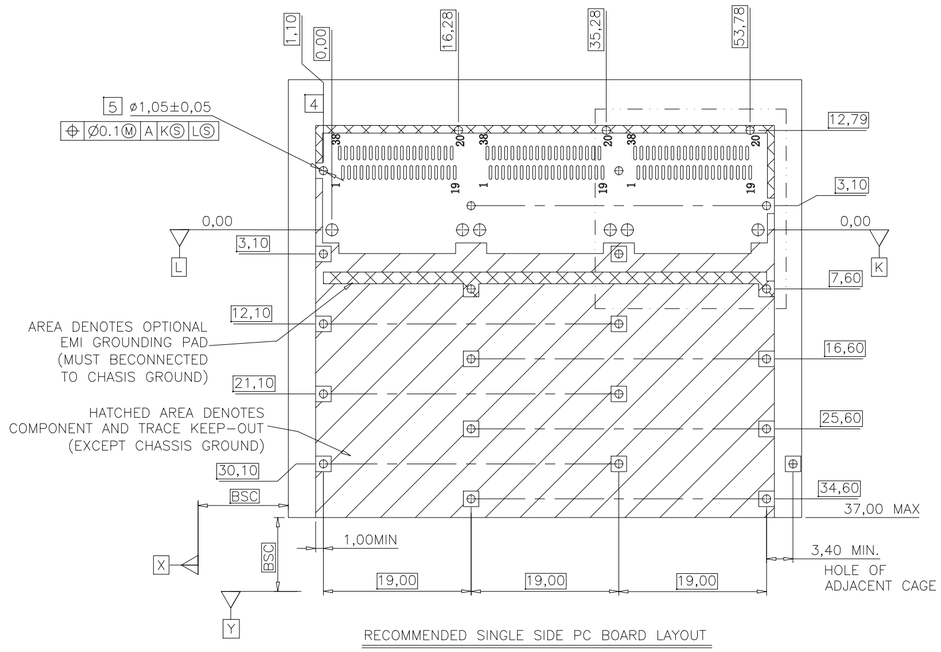

RECOMMENDED SINGLE SIDE PC BOARD LAYOUT

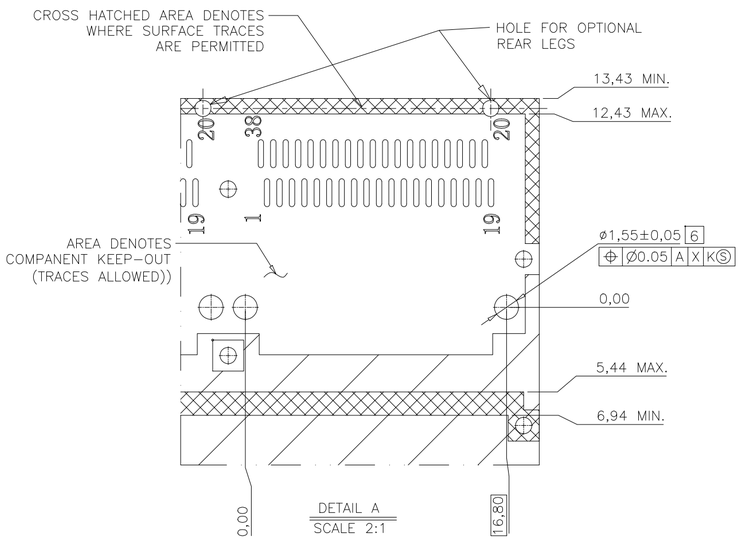

DETAIL A
SCALE 2:1

FOR CAGE ASSEMBLIES WITH LIGHT PIPES

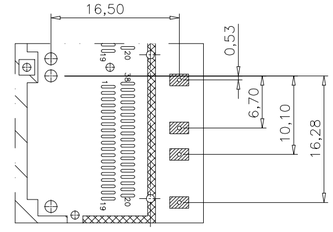

QUAD LIGHT PIPE LED LOCATION

NOTES:

1. DATUM X & Y ARE ESTABLISHED BY THE CUSTOMER'S FIDUCIAL
2. DATUM A IS THE TOP SURFACE OF THE HOST BOARD
3. LOCATION OF THE EDGE OF PCB IS APPLICATION SPECIFIC
4. BASELINE FOR THESE DIMENSIONS IS THE CENTER OF COMPLIANT PIN HOLE.
5. FINISHED HOLE SIZE
6. UNPLATED THRU HOLE.
7. REFER TO SFF8662 FOR CONNECTOR FOOTING DIMENSIONS

RoHS 2011/65/EU

TITLE: QSFP28 1X3 CAGE WITH EMI SPRING FINGER LIGHT PIPE HEAT SINK			LINK-PP INT'L TECHNOLOGY CO., LIMITED			
PART NO.: LP13FC011I0S			GENNERAL TOLERANCE		UNIT:MM	SIZE:A4
APPROVE	CHECK	DRAW	◦ X±0.20	◦ X±1°	SCALE:1:1	SHEET:4/5 REV:A
LEO	JAMES	JAMES	◦ XX±0.15	◦ XX±5°		
			◦ XXX±0.10			

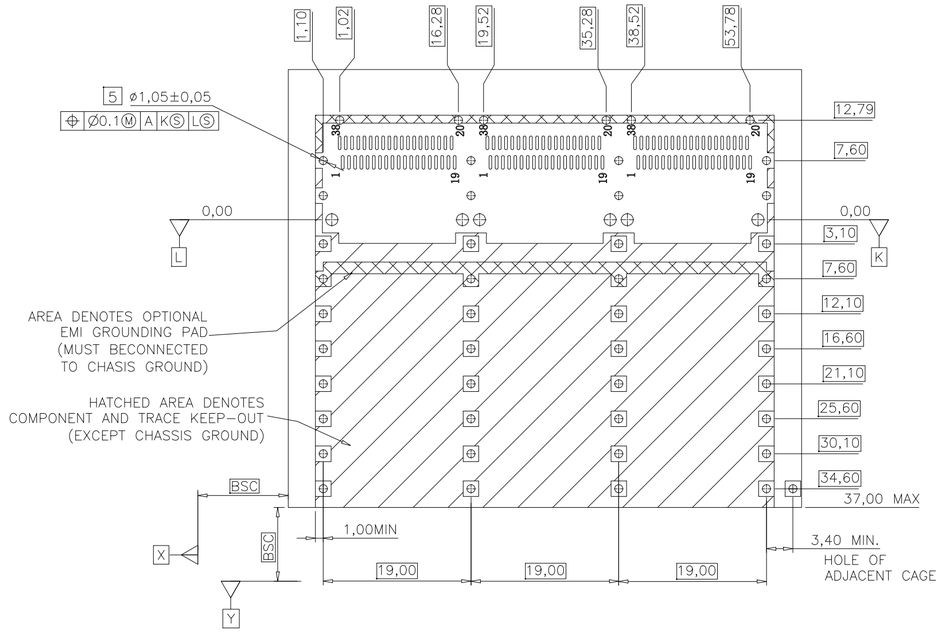

RECOMMENDED BELLY TO BELLY PC BOARD LAYOUT

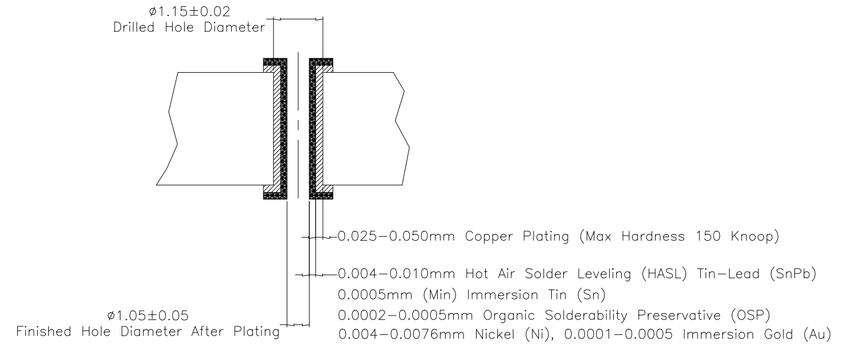

FINISHED HOLE SIZE SPECS

RoHS 2011/65/EU

TITLE: QSFP28 1X3 CAGE WITH EMI SPRING FINGER LIGHT PIPE HEAT SINK			LINK-PP INT'L TECHNOLOGY CO., LIMITED			
PART NO.: LP13FC011I0S			GENNERAL TOLERANCE		UNIT:MM	SIZE:A4
APPROVE	CHECK	DRAW	◦ X±0.20	◦ X±1°	SCALE:1:1	SHEET:5/5	REV:A
LEO	JAMES	JAMES	◦ XX±0.15	◦ XX±5°			
			◦ XXX±0.10			