REV.	DESCRIPTION OF CHANGE	REVIEWED BY	ISSUE DATE
A	FIRST ISSUE	JULY	2024-07-19

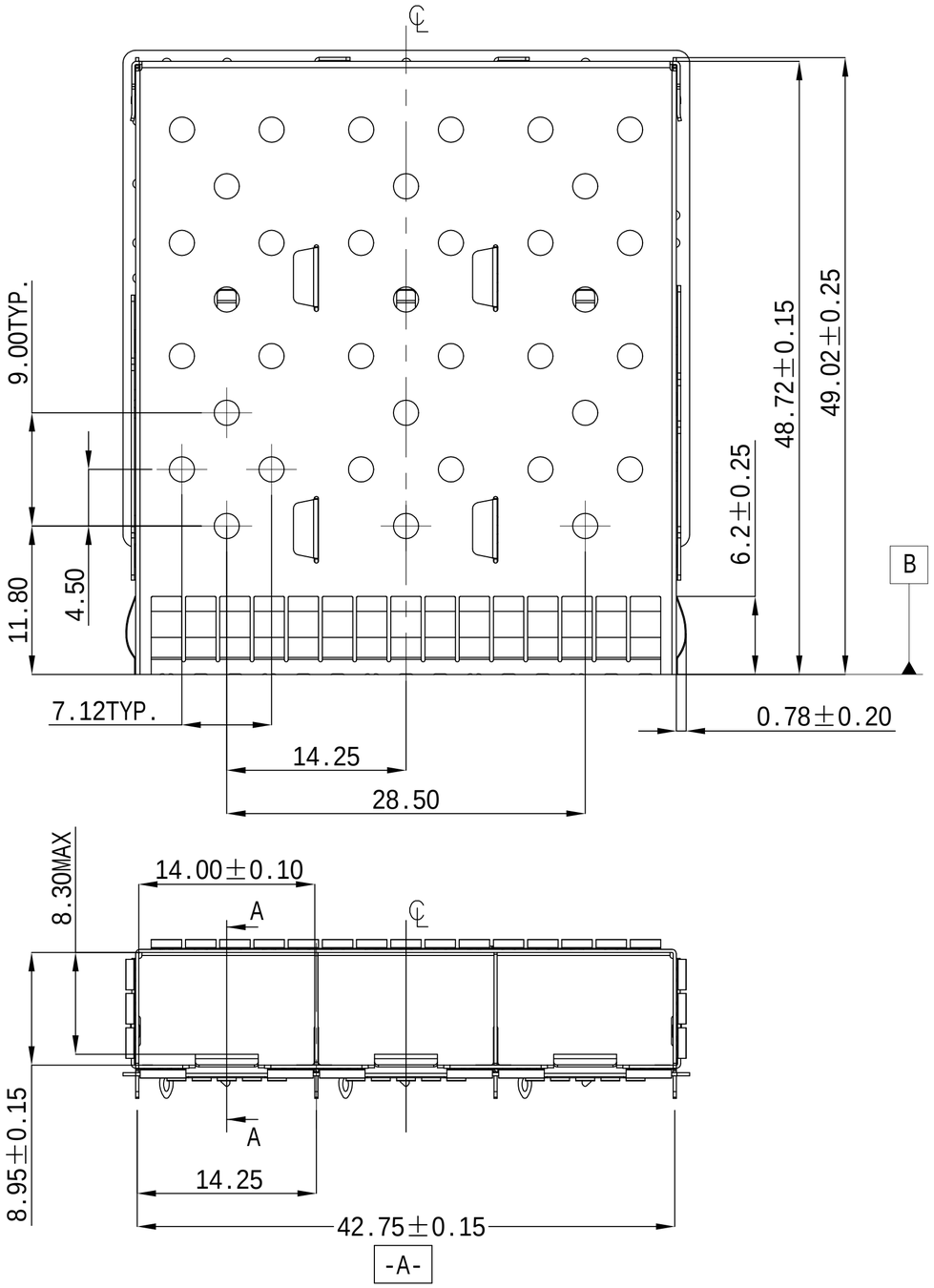

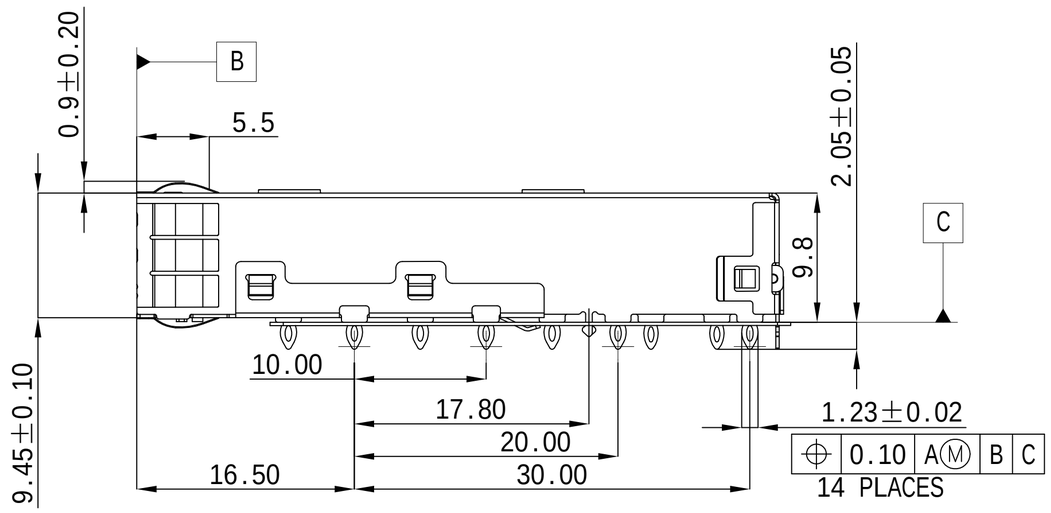

NOTE:

SHIELD(CAGE) MATERIAL:

1. CAGE ASSEMBLY:COPPER ALLOY THICKNESS T=0.25MM
2. EMI SPRING:PHOSPHOR BRONZE THICKNESS T=0.25MM ,NICKEL PLATED
3. PCB GASKET:RF ABSOEBER

MECHANICAL:

1. INSERTFORCE/EXTRACTION FORCE:40N MAXIMUM /11.5N MAXIMUM.
2. DURABILITY:100 CYCLES MIN.

TEMPERATURE:

1. STORAGE: -40° C TO +85° C.
2. OPERATION: -40° C TO +85° C.

HARMFUL MATERIAL CONTROL FOLLOW ROHS

RoHS 2011/65/EU

TITLE: SFP28 1X3 CAGE WITH EMI SPRING FINGER			LINK-PP INT'L TECHNOLOGY CO., LIMITED			
PART NO.: LP13CC01000DS			GENNERAL TOLERANCE		UNIT:MM	SIZE:A4
APPROVE	CHECK	DRAW	.X±0.25	.X±1°	SCALE:1:1	SHEET:1/5 REV:A
JULY	Kevin	Kevin	.XX±0.15	.XX±5°		
			.XXX±0.10			

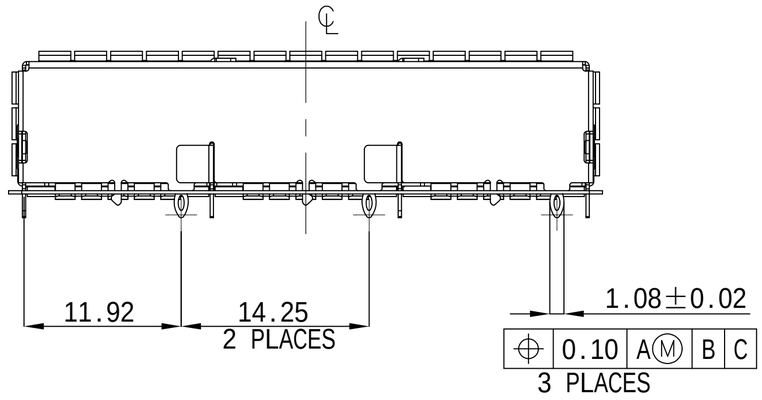

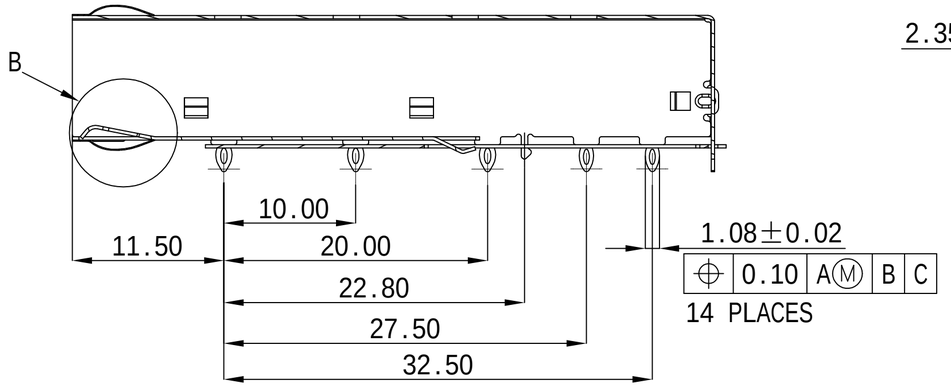

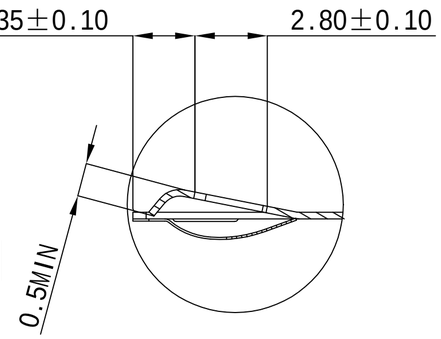

DETAIL VIEW B
SCALE 4 : 1

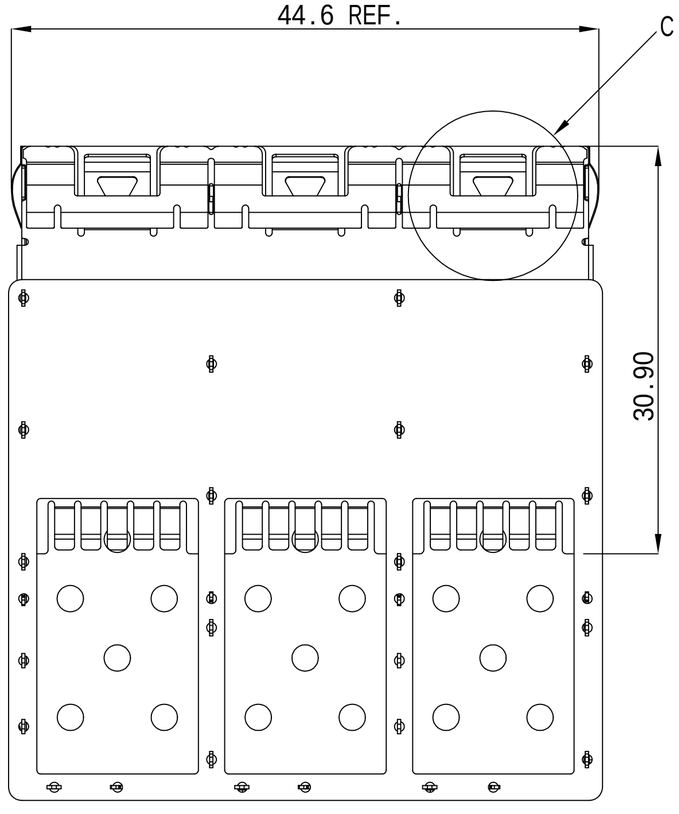

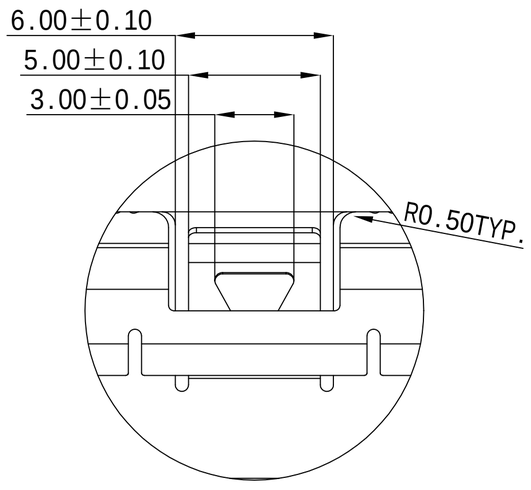

DETAIL VIEW C
SCALE 4 : 1

RoHS 2011/65/EU

TITLE: SFP28 1X3 CAGE WITH EMI SPRING FINGER			LINK-PP INT'L TECHNOLOGY CO., LIMITED				
PART NO.: LP13CC01000DS			GENNERAL TOLERANCE			UNIT:MM	SIZE:A4
APPROVE	CHECK	DRAW	.X±0.25	.X±1°	SCALE:1:1	SHEET:2/5	REV:A
JULY	Kevin	Kevin	.XX±0.15	.XX±5°			
			.XXX±0.10				

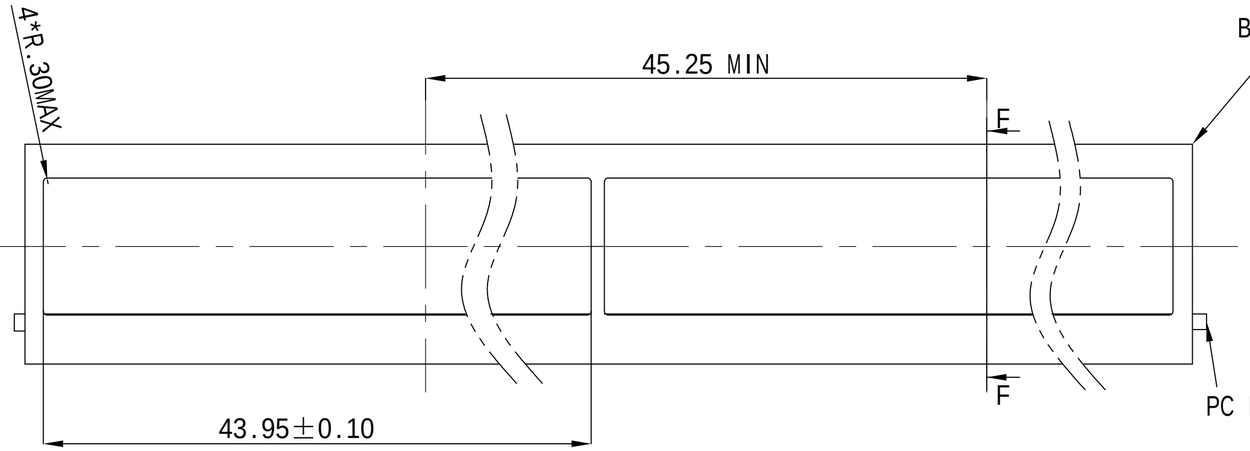

RECOMMEDED BEZEL CUT-OUT
SINGLE SIDED APPLICATION

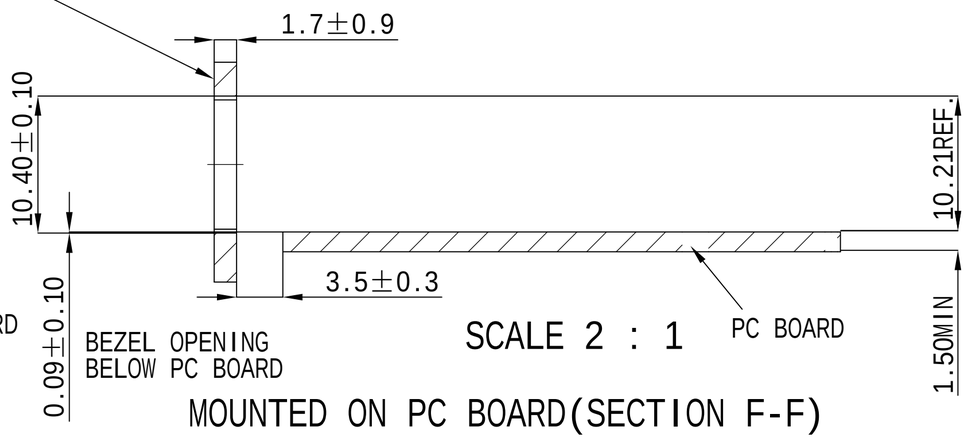

SCALE 2 : 1

MOUNTED ON PC BOARD(SECTION F-F)
SHOWN THRU RECOMMEDED BEZEL

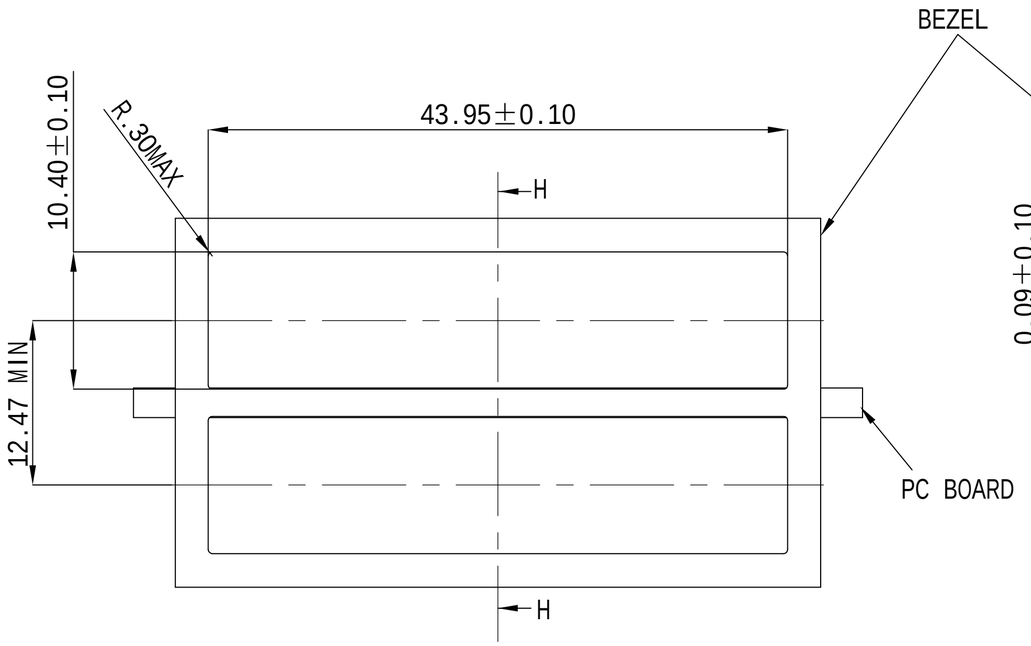

RECOMMEDED BEZEL CUT-OUT
BELLY TO BELLY APPLICATION

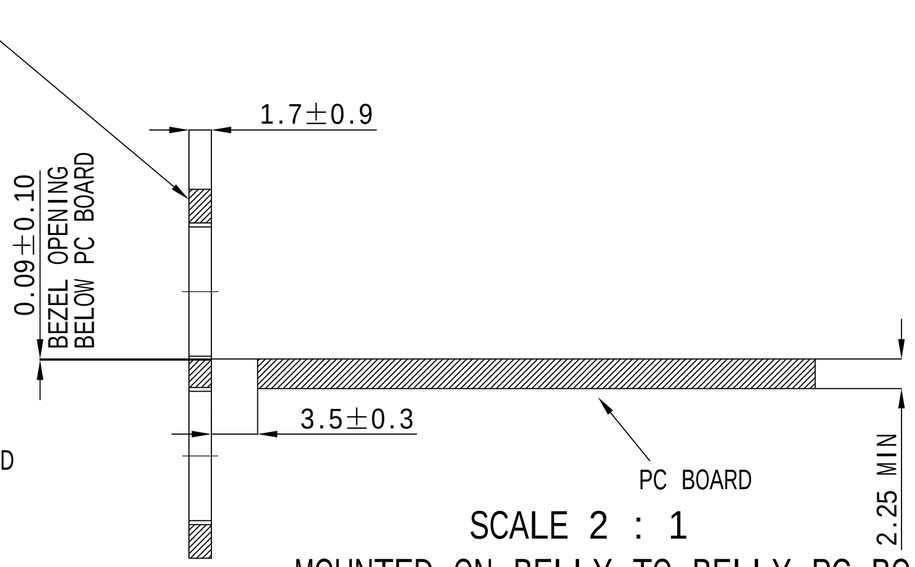

SCALE 2 : 1

MOUNTED ON BELLY TO BELLY PC BOARD(SECTION H-H)
SHOWN THRU RECOMMEDED BEZEL

RoHS 2011/65/EU

TITLE: SFP28 1X3 CAGE WITH EMI SPRING FINGER			LINK-PP INT'L TECHNOLOGY CO., LIMITED				
PART NO.: LP13CC01000DS			GENNERAL TOLERANCE			UNIT:MM	SIZE:A4
APPROVE	CHECK	DRAW	.X±0.25	.X±1°	SCALE:1:1	SHEET:3/5	REV:A
JULY	Kevin	Kevin	.XX±0.15	.XX±5°			
			.XXX±0.10				

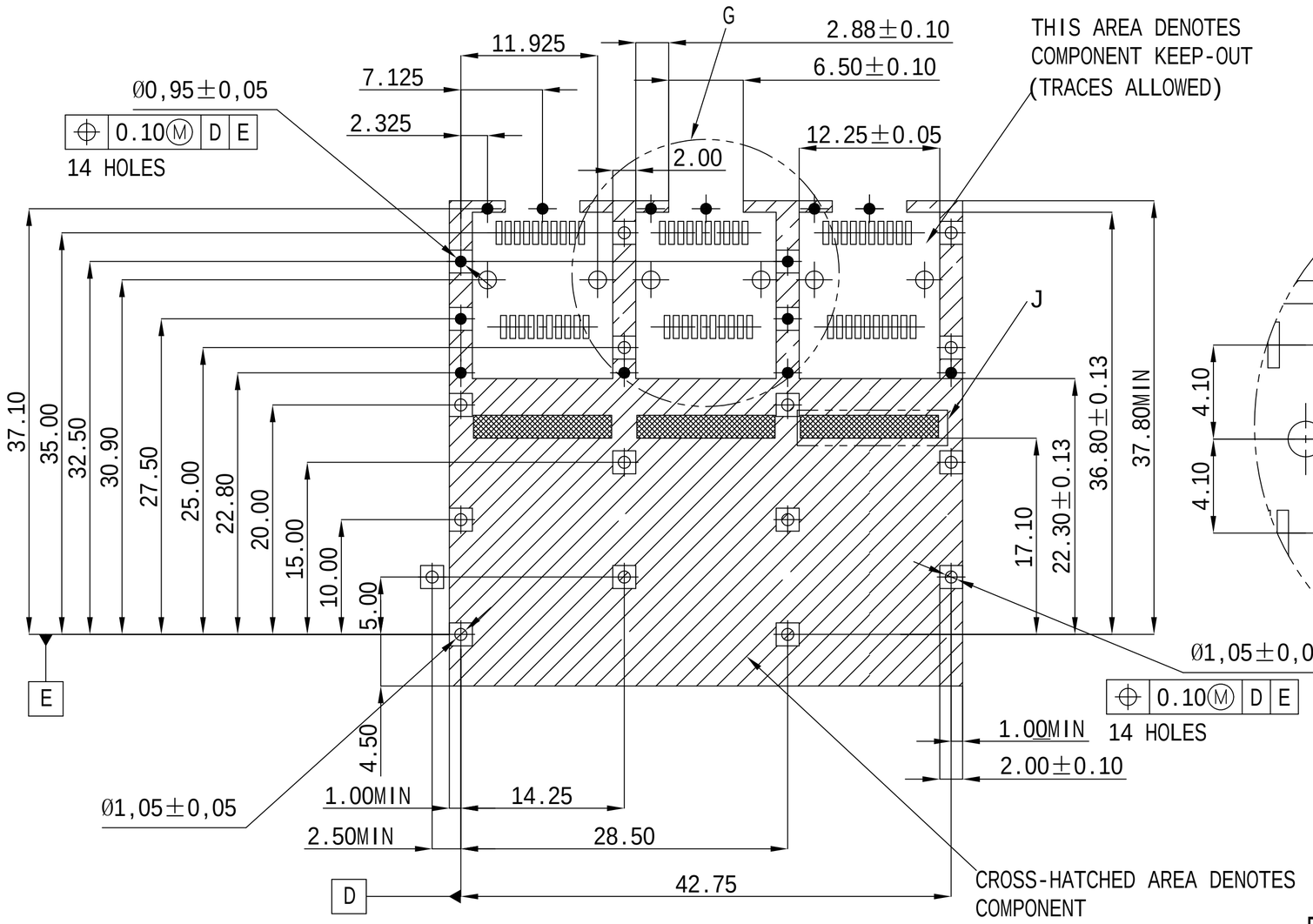

RECOMMEDED PCB CONFIGURATION WITH KEEP-OUT AREAS SINGLE SIDED APPLATION

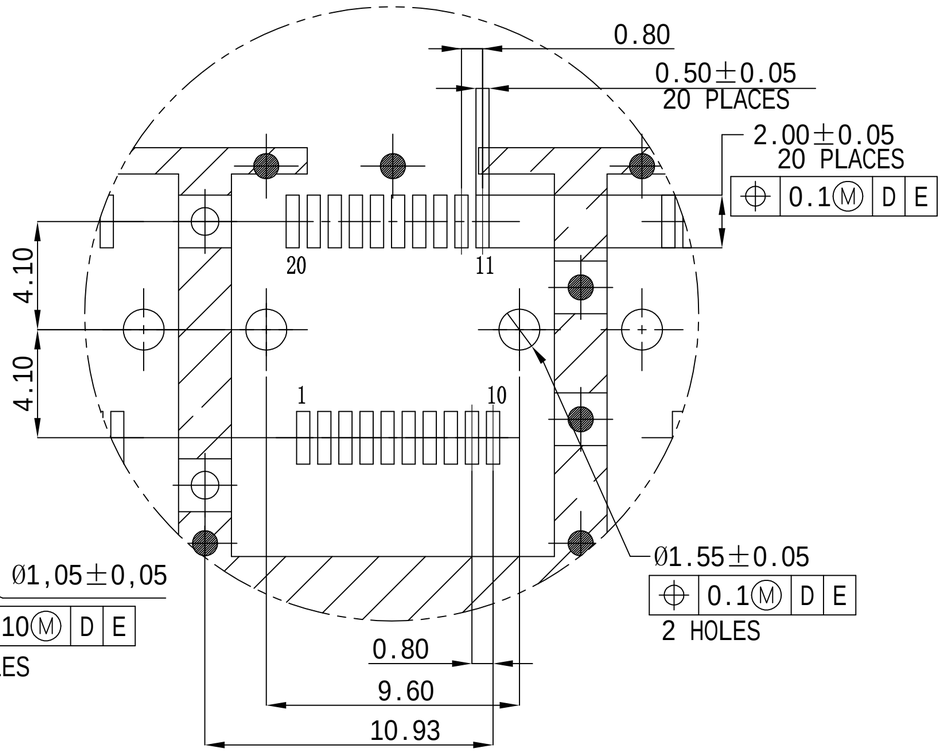

DETAIL VIEW G
SCALE 4 : 1

RECOMMEDED PT CONNECTOR LAYOUT

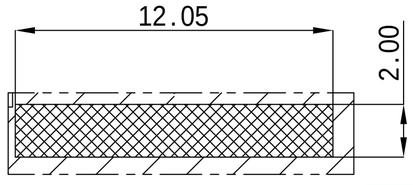

DETAIL VIEW J
SCALE 4 : 1

RoHS 2011/65/EU

TITLE: SFP28 1X3 CAGE WITH EMI SPRING FINGER			LINK-PP INT'L TECHNOLOGY CO., LIMITED				
PART NO.: LP13CC01000DS			GENNERAL TOLERANCE			UNIT:MM	SIZE:A4
APPROVE	CHECK	DRAW	.X±0.25	.X±1°	SCALE:1:1	SHEET:4/5	REV:A
JULY	Kevin	Kevin	.XX±0.15	.XX±5°			
			.XXX±0.10				

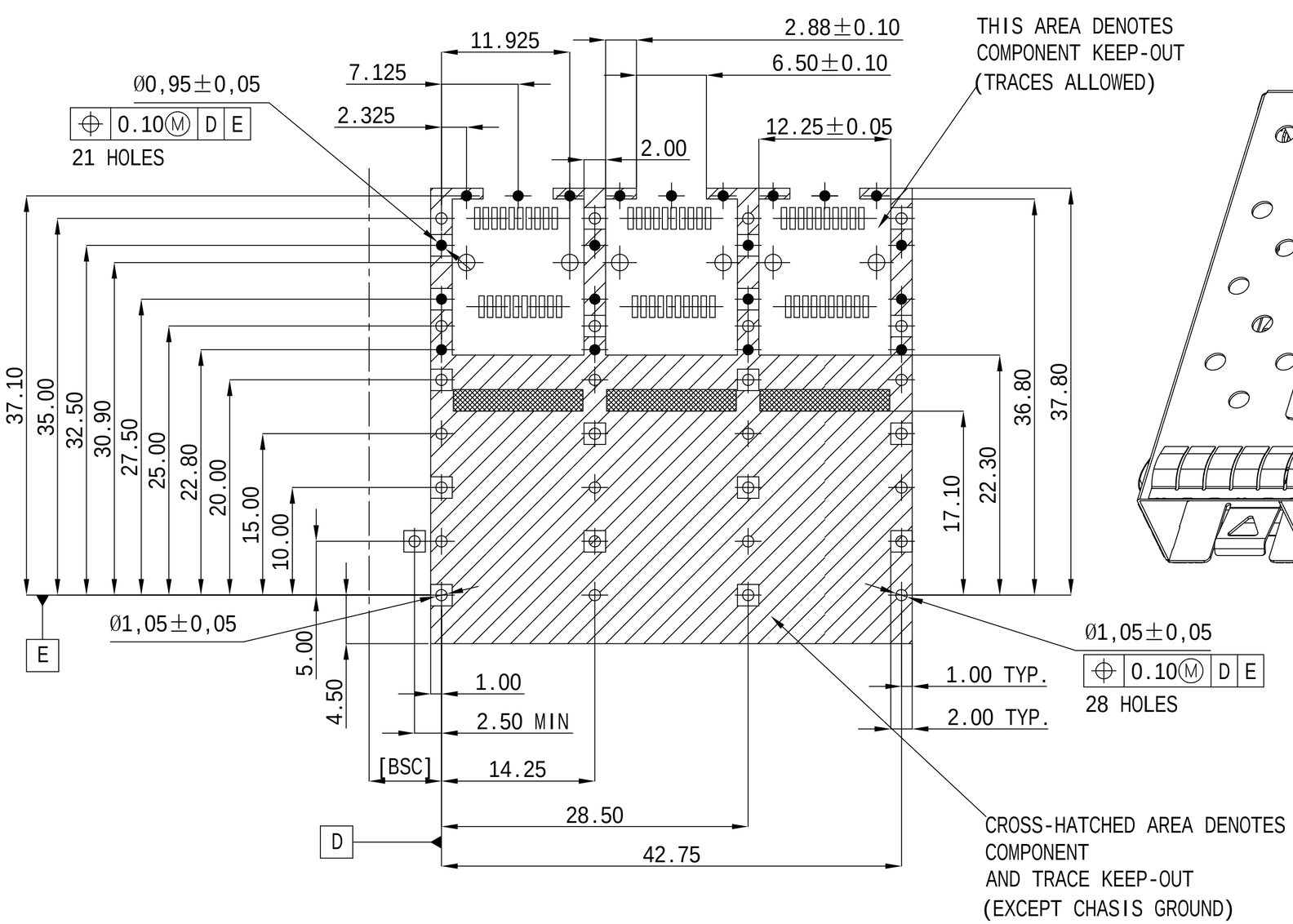

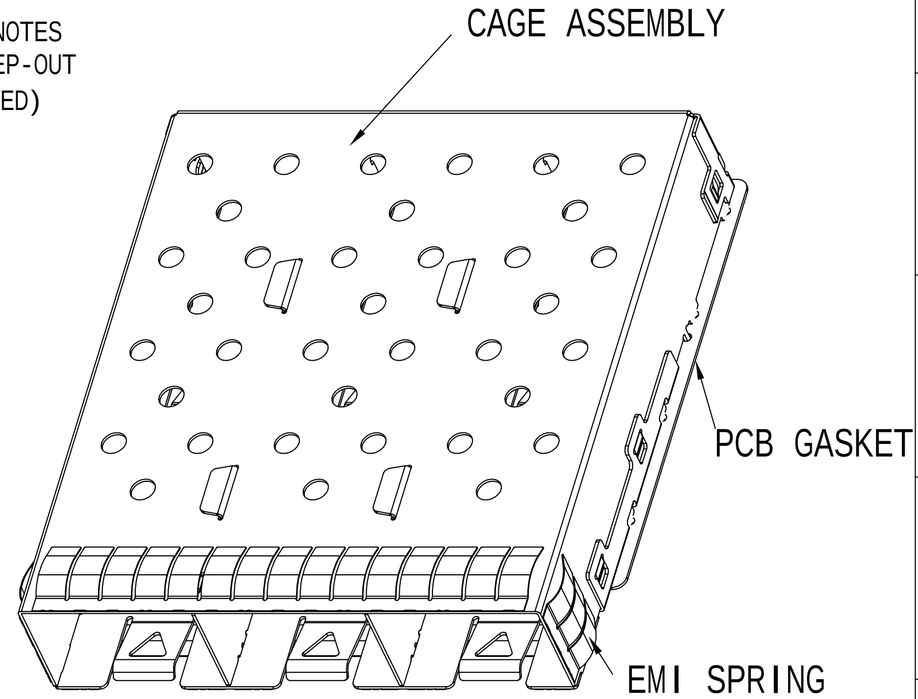

RECOMMEDED PCB CONFIGURATION WITH
KEEP-OUT AREAS SINGLE SIDED APPLATION

RoHS 2011/65/EU

TITLE: SFP28 1X3 CAGE WITH EMI SPRING FINGER			LINK-PP INT'L TECHNOLOGY CO., LIMITED				
PART NO.: LP13CC01000DS			GENNERAL TOLERANCE			UNIT:MM	SIZE:A4
APPROVE	CHECK	DRAW	.X±0.25	.X±1°	SCALE:1:1	SHEET:5/5	REV:A
JULY	Kevin	Kevin	.XX±0.15	.XX±5°			
			.XXX±0.10				