REV.	DESCRIPTION OF CHANGE	REVIEWED BY	ISSUE DATE
A	FIRST ISSUE	XUAN	2025-01-04

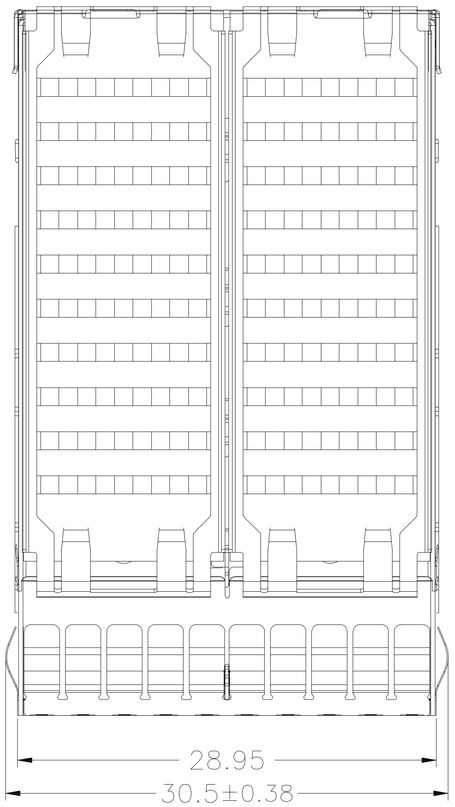

NOTES:
1.MATERIAL:
CAGE: COPPER ALLOY,NI PLATING,THICKNESS 0.25mm
MIDDLE CAGE: STAINLESS STEEL
HEAT SINK : ALUMINUM(SURFACE TREATMENT:BLACK OXIDE
HEAT SINK CLIP: STAINLESS STEEL
2.PACKAGING: TRAY PACKAGING
3.TEMPERATURE RANGE:
OPERATING : −40°C TO +85°C
NON OPERATING : −55°C TO +105°C

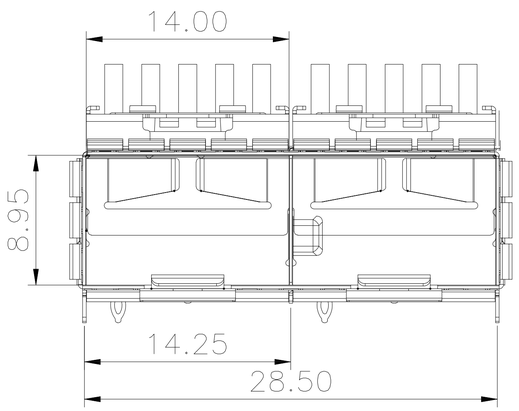

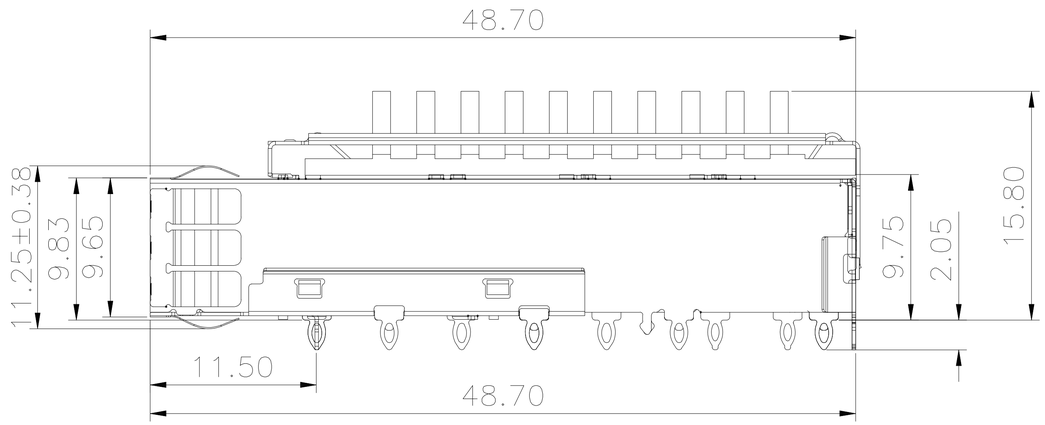

RoHS 2011/65/EU

TITLE	SFP28 1X2 CAGE WITH EMI SPRING FINGER HEAT SINK		LINK-PP INT'L TECHNOLOGY CO., LIMITED			
PART NO.	LP12CC01050S-RN		GENNERAL TOLERANCE		UNIT:MM	SIZE:A4
APPROVE	CHECK	DRAW	.X±0.25	.X±1°	SCALE:1:1	SHEET:1/4 REV:A
XUAN	Kevin	Kevin	.XX±0.15	.XX±5°		
			.XXX±0.10			

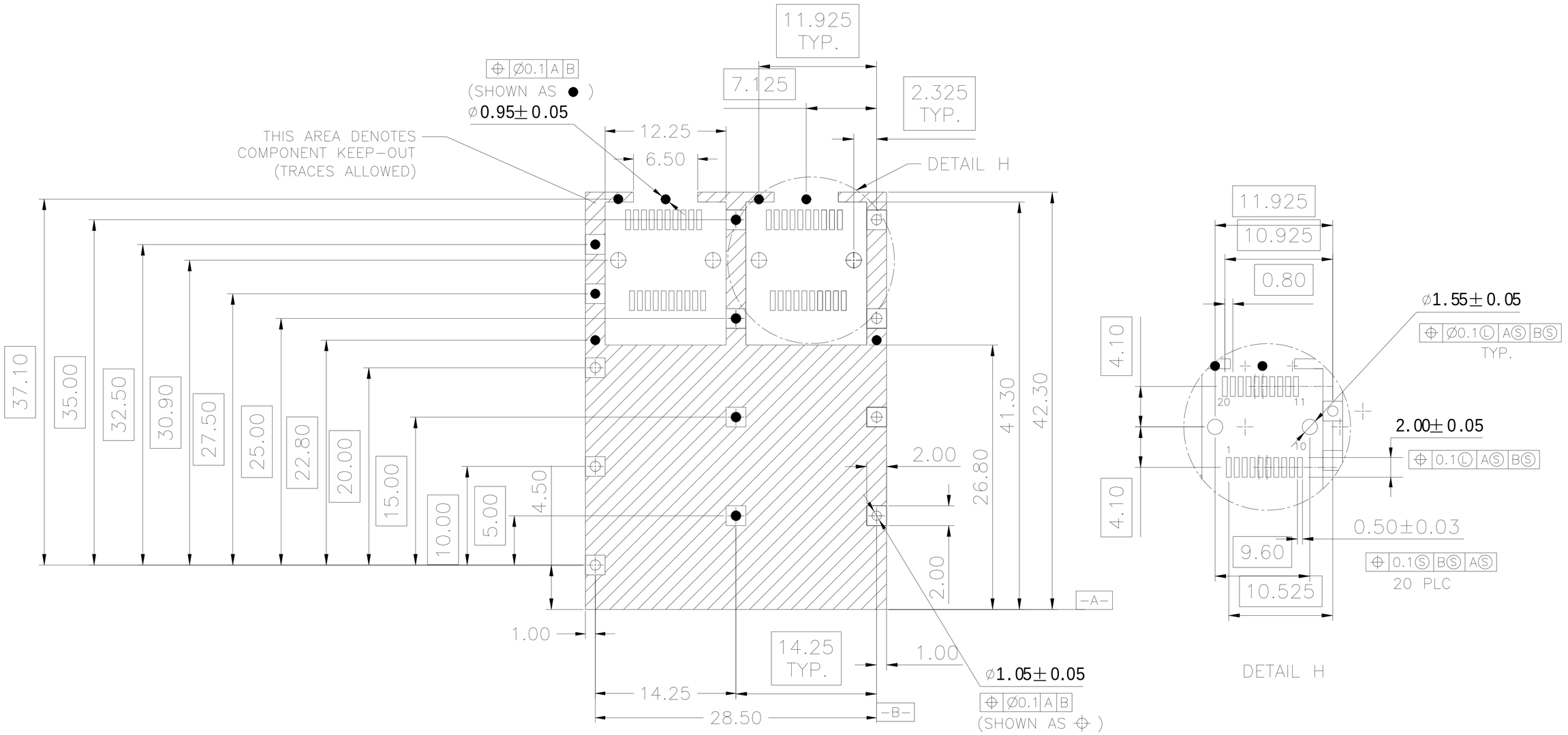

PCB LAYOUT
FOR SINGLE SIDE MOUNTING

RoHS
2011/65/EU

TITLE: SFP28 1X2 CAGE WITH EMI SPRING FINGER HEAT SINK			LINK-PP INT'L TECHNOLOGY CO., LIMITED				
PART NO.: LP12CC01050S-RN			GENNERAL TOLERANCE			UNIT:MM	SIZE:A4
APPROVE	CHECK	DRAW	.X±0.25	.X±1°	SCALE:1:1	SHEET:2/4	REV:A
XUAN	Kevin	Kevin	.XX±0.15	.XX±5°			
			.XXX±0.10				

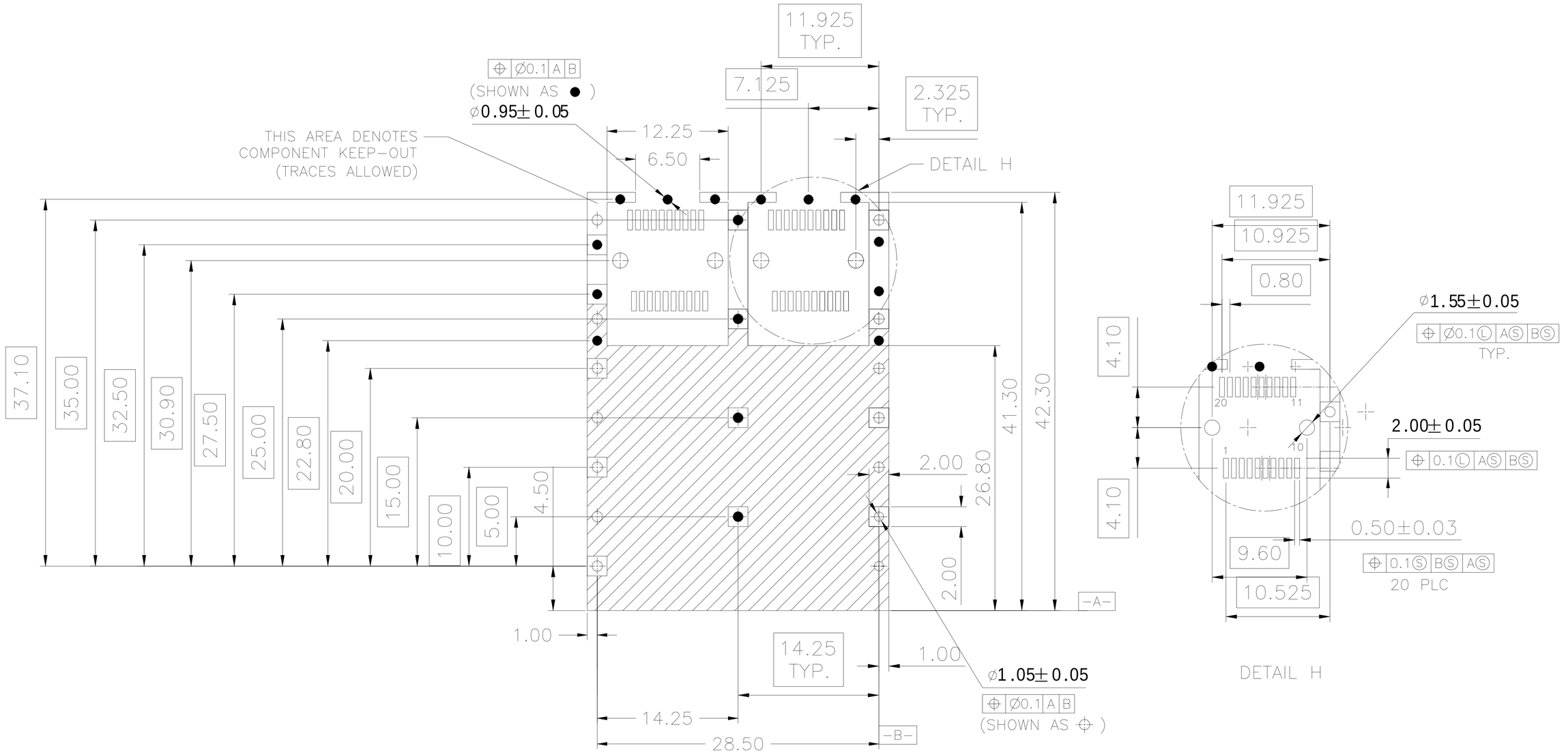

PCB LAYOUT
FOR BELLY TO BELLY SIDE MOUNTING

RoHS 2011/65/EU

TITLE: SFP28 1X2 CAGE WITH EMI SPRING FINGER HEAT SINK			LINK-PP INT'L TECHNOLOGY CO., LIMITED				
PART NO.: LP12CC01050S-RN			GENNERAL TOLERANCE			UNIT:MM	SIZE:A4
APPROVE	CHECK	DRAW	.X±0.25	.X±1°	SCALE:1:1	SHEET:3/4	REV:A
XUAN	Kevin	Kevin	.XX±0.15	.XX±5°			
			.XXX±0.10				

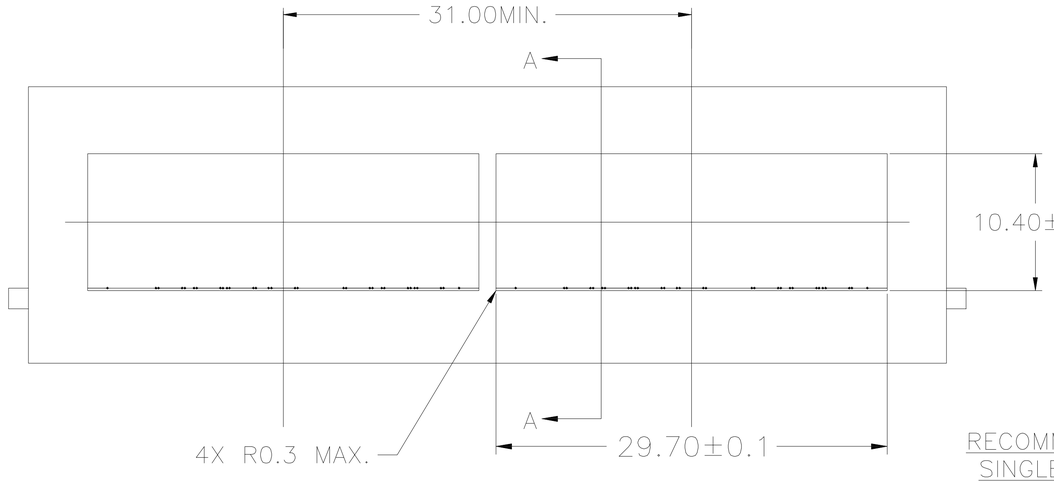

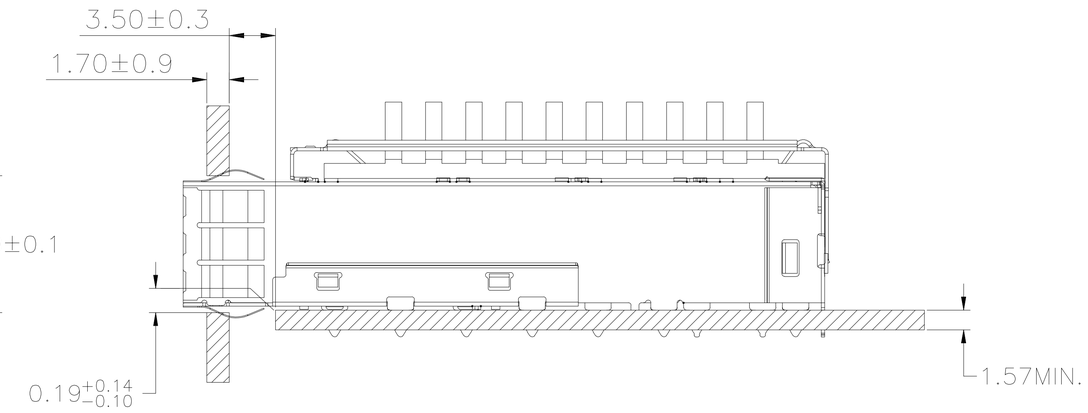

SECTION A–A

RECOMMENDED BEZEL DESIGN
SINGLE SIDED APPLICATIONS

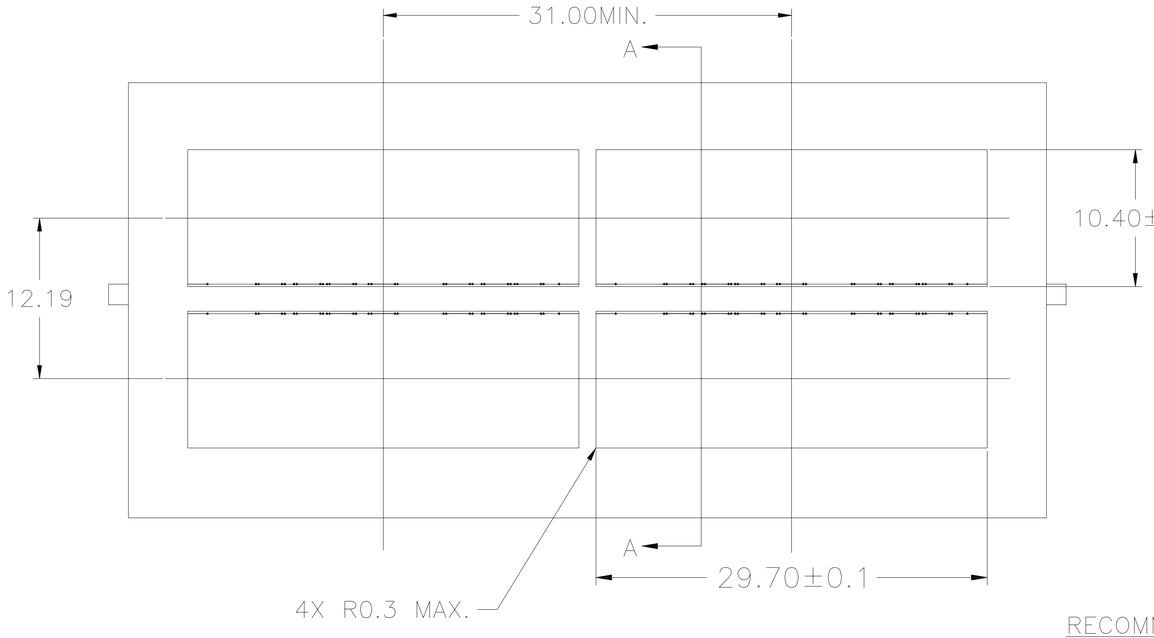

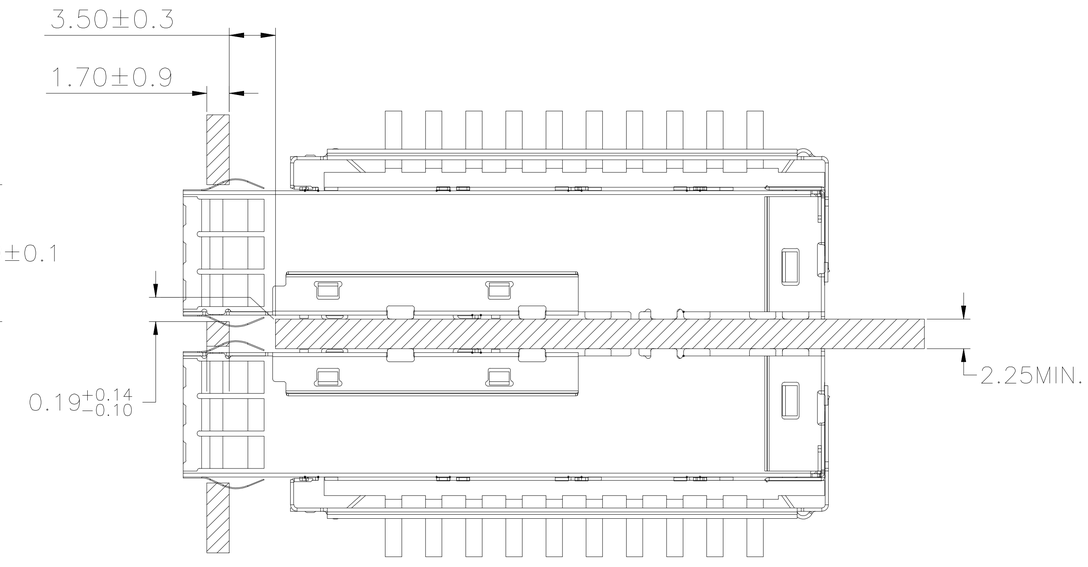

RECOMMENDED BEZEL DESIGN
BELLY TO BELLY APPLICATIONS

SECTION A–A

RoHS 2011/65/EU

TITLE: SFP28 1X2 CAGE WITH EMI SPRING FINGER HEAT SINK			LINK-PP INT'L TECHNOLOGY CO., LIMITED				
PART NO. LP12CC01050S-RN			GENNERAL TOLERANCE			UNIT:MM	SIZE:A4
APPROVE	CHECK	DRAW	.X±0.25	.X±1°	SCALE:1:1	SHEET:4/4	REV:A
XUAN	Kevin	Kevin	.XX±0.15	.XX±5°			
			.XXX±0.10				