REV.	DESCRIPTION OF CHANGE	REVIEWED BY	ISSUE DATE
A1	CAGE INTEGRATED TYPE	XUAN	2025-01-07

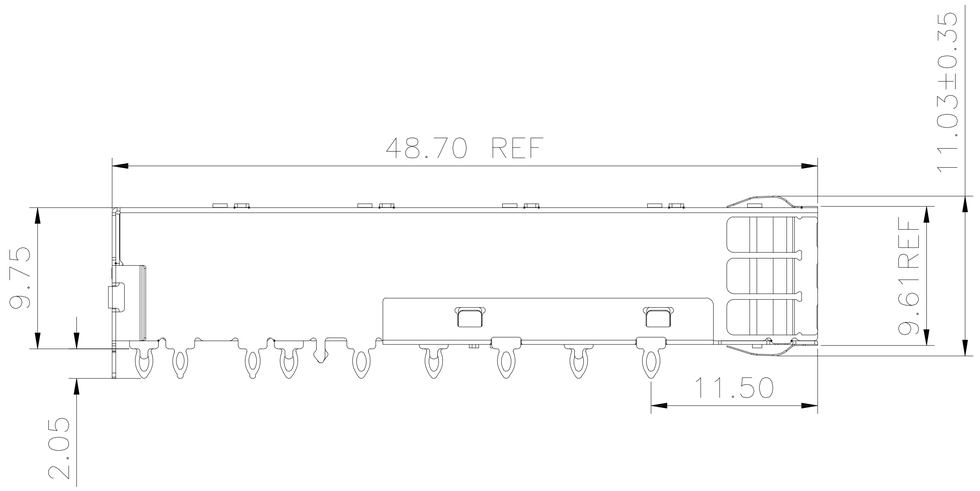

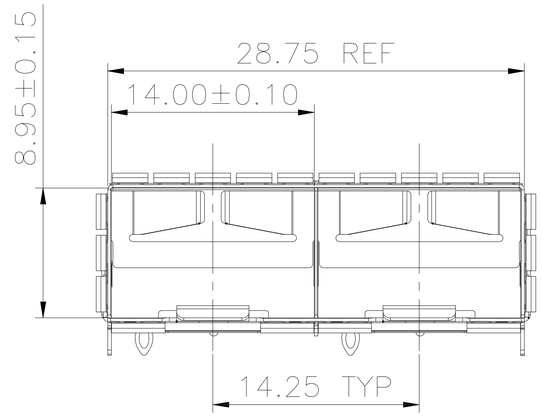

NOTES:
1.MATERIAL: STAINLESS STEEL, NICKEL PLATED,THICKNESS 0.25mm
2.PACKAGING: TRAY PACKAGING
3.TEMPERATURE RANGE:
OPERATING : −40°C TO +85°C
NON OPERATING : −55°C TO +105°C

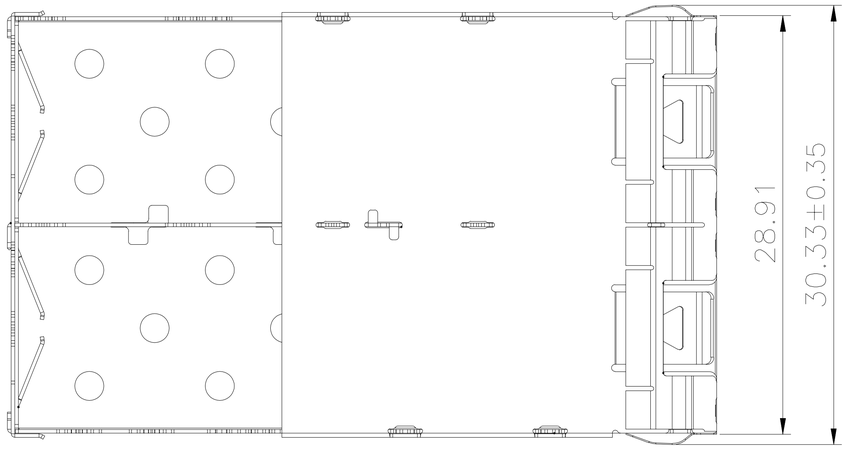

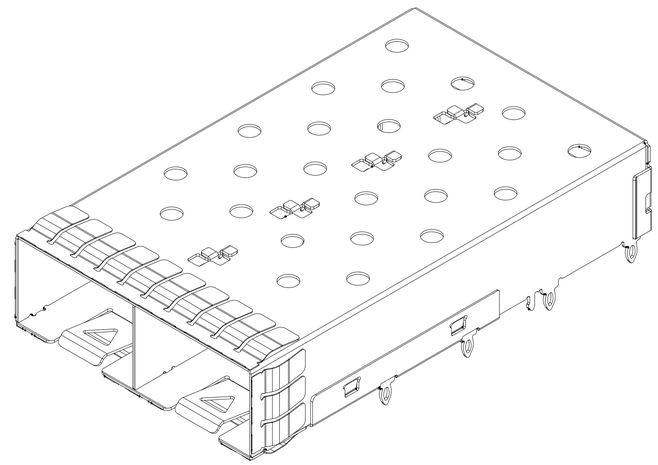

RoHS 2011/65/EU

TITLE			LINK-PP INT'L TECHNOLOGY CO., LIMITED				
SFP28 1X2 CAGE WITH EMI SPRING FINGER							
PART NO. LP12CC01000SY-RN			GENNERAL TOLERANCE			UNIT:MM	SIZE:A4
APPROVE	CHECK	DRAW	.X±0.25	.X±1°	SCALE:1:1	SHEET:1/4	REV:A1
XUAN	Kevin	Kevin	.XX±0.15	.XX±5°			
			.XXX±0.10				

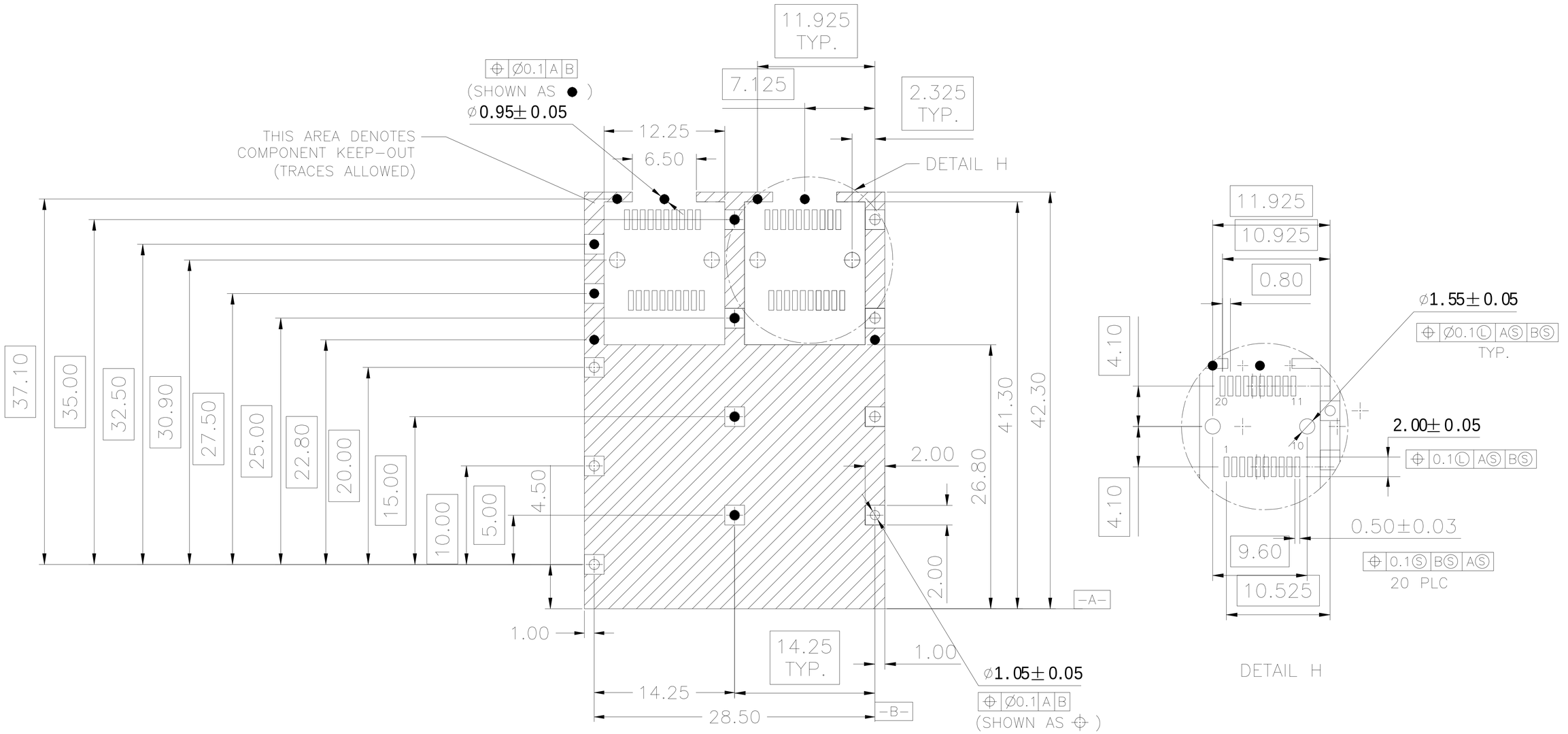

PCB LAYOUT
FOR SINGLE SIDE MOUNTING

RoHS 2011/65/EU

TITLE: SFP28 1X2 CAGE WITH EMI SPRING FINGER			LINK-PP INT'L TECHNOLOGY CO., LIMITED				
PART NO. LP12CC01000SY-RN			GENNERAL TOLERANCE			UNIT:MM	SIZE:A4
APPROVE	CHECK	DRAW	.X±0.25	.X±1°	SCALE:1:1	SHEET:2/4	REV:A1
XUAN	Kevin	Kevin	.XX±0.15	.XX±5°			
			.XXX±0.10				

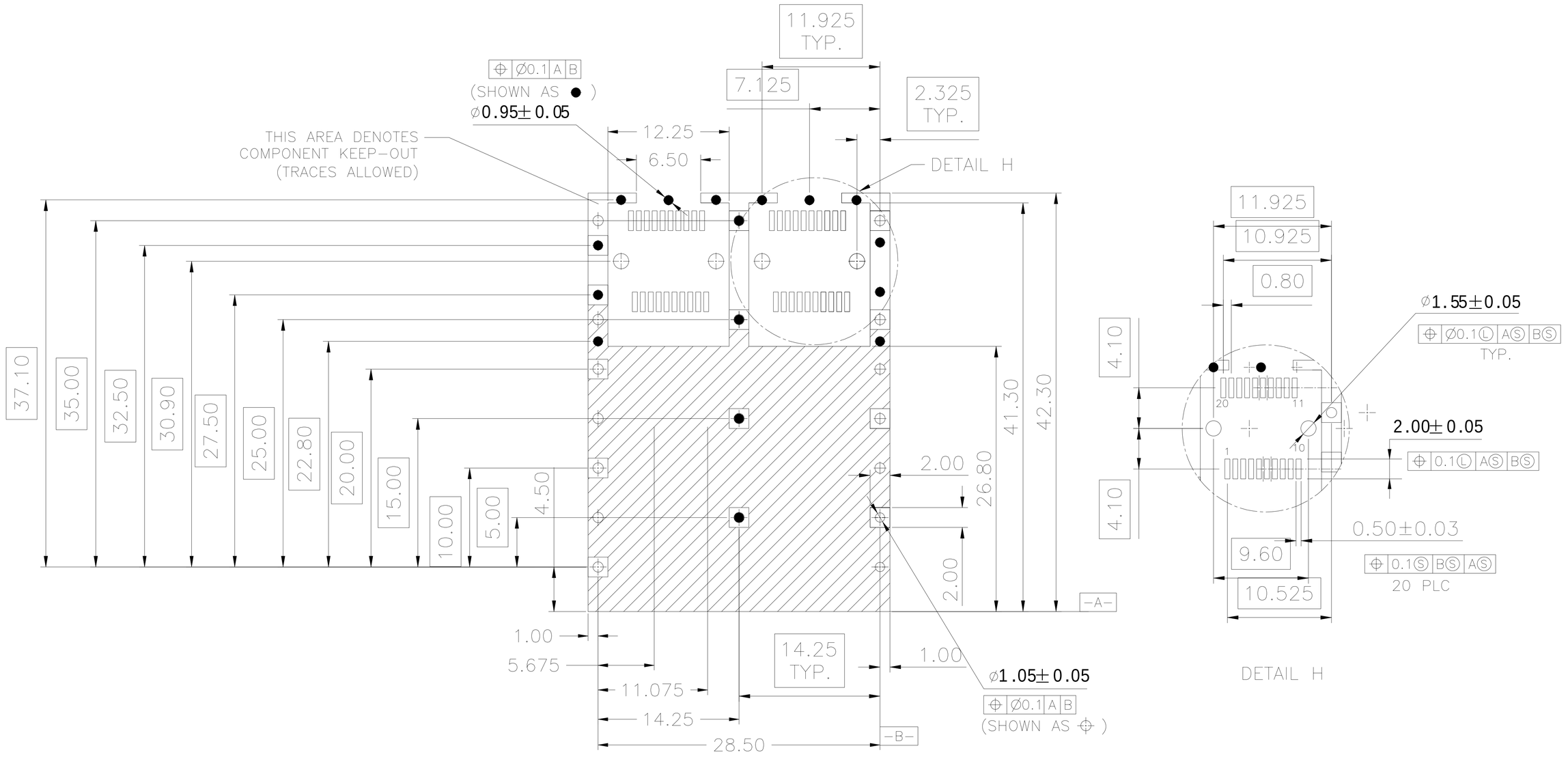

PCB LAYOUT
FOR BELLY TO BELLY SIDE MOUNTING

RoHS
2011/65/EU

TITLE: SFP28 1X2 CAGE WITH EMI SPRING FINGER			LINK-PP INT'L TECHNOLOGY CO., LIMITED				
PART NO.: LP12CC01000SY-RN			GENNERAL TOLERANCE			UNIT:MM	SIZE:A4
APPROVE	CHECK	DRAW	.X±0.25	.X±1°	SCALE:1:1	SHEET:3/4	REV:A1
XUAN	Kevin	Kevin	.XX±0.15	.XX±5°			
			.XXX±0.10				

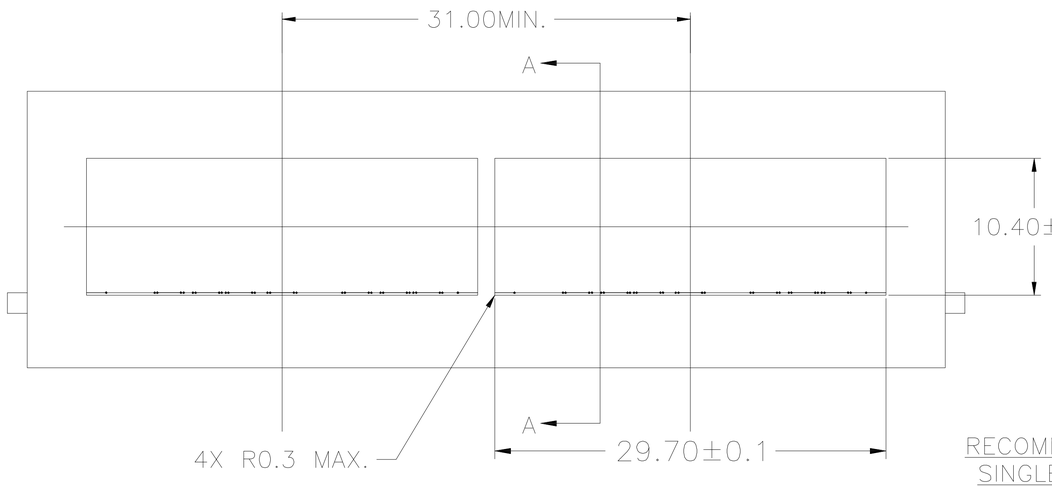

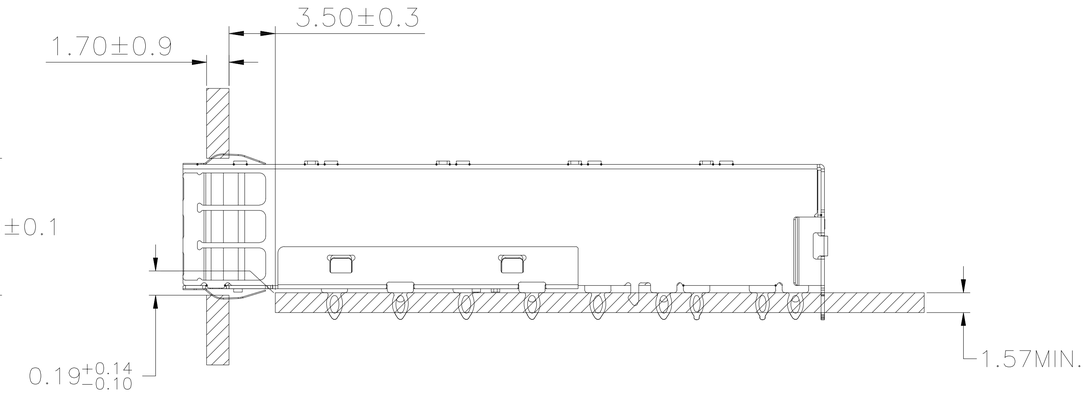

SECTION A–A

RECOMMENDED BEZEL DESIGN
SINGLE SIDED APPLICATIONS

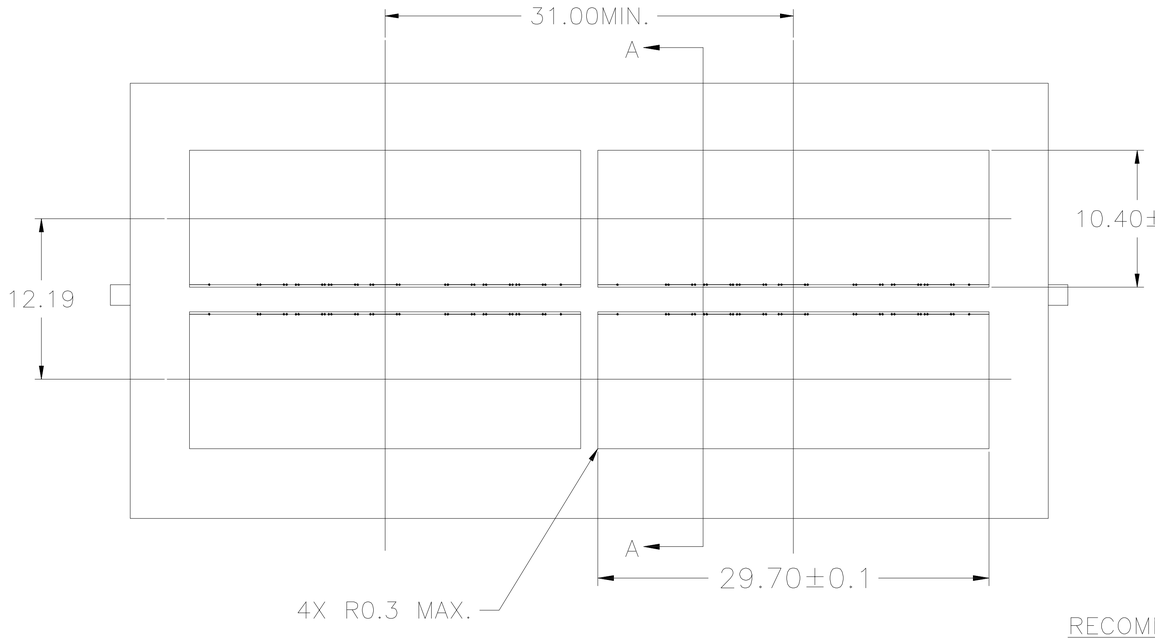

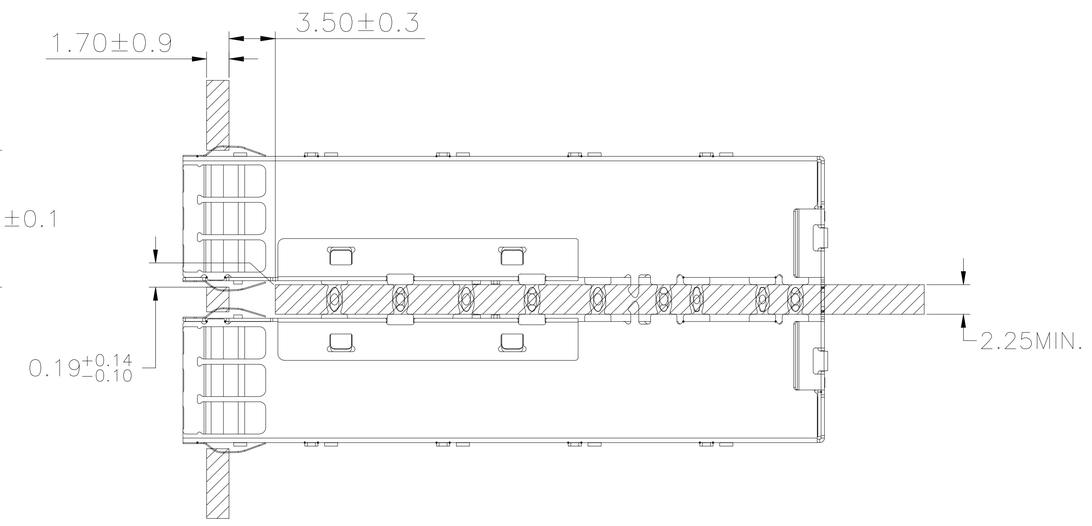

SECTION A–A

RECOMMENDED BEZEL DESIGN
BELLY TO BELLY APPLICATIONS

RoHS 2011/65/EU

TITLE: SFP28 1X2 CAGE WITH EMI SPRING FINGER			LINK-PP INT'L TECHNOLOGY CO., LIMITED				
PART NO.: LP12CC01000SY-RN			GENNERAL TOLERANCE			UNIT:MM	SIZE:A4
APPROVE	CHECK	DRAW	.X±0.25	.X±1°	SCALE:1:1	SHEET:4/4	REV:A1
XUAN	Kevin	Kevin	.XX±0.15	.XX±5°			
			.XXX±0.10				