REV.	DESCRIPTION OF CHANGE	REVIEWED BY	ISSUE DATE
A	FIRST ISSUE	JULY	2023-11-20

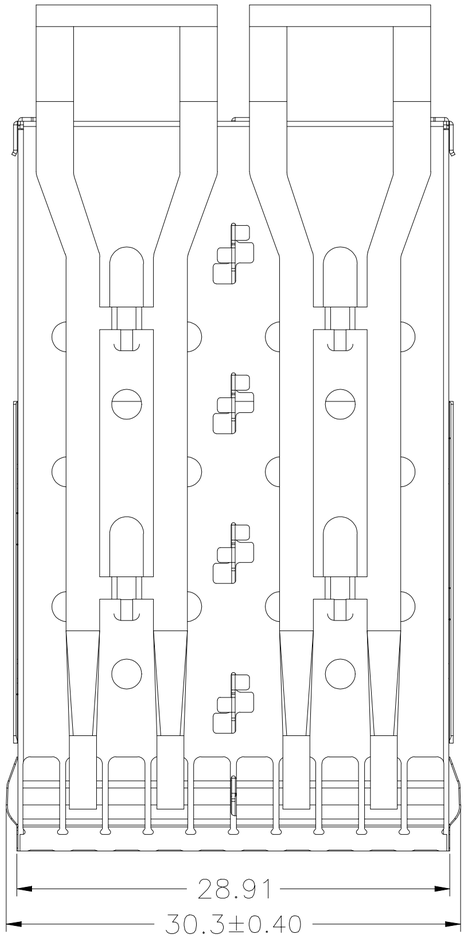

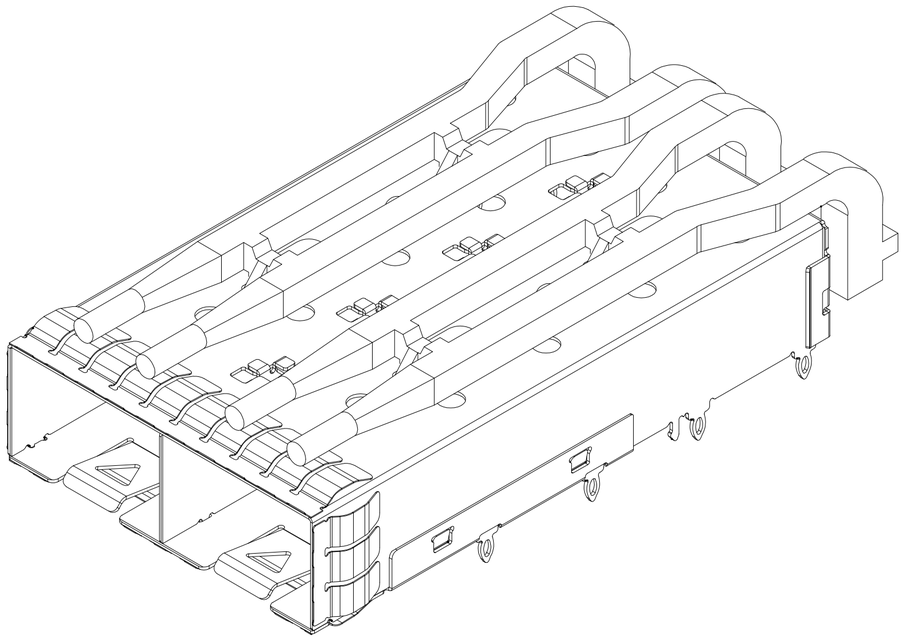

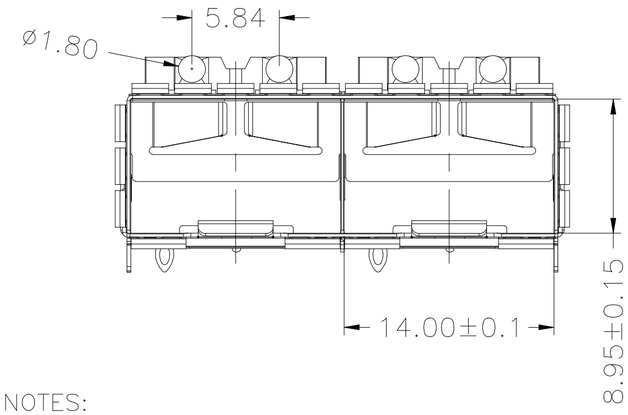

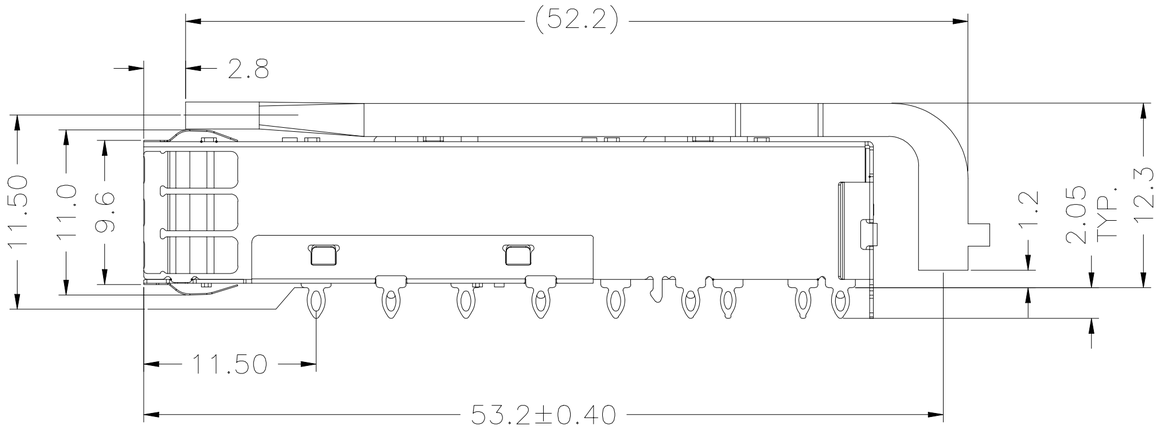

NOTES:

1.MATERIAL: COPPER ALLOY, NI-PLATED
  LIGHT PIPE: PC,THANSPARENT
2.PACKAGING: TRAY PACKAGING
3.TEMPERATURE RANGE: -55°C TO +105°C

RoHS 2011/65/EU

TITLE: SFP+ 1X2 CAGE WITH EMI SPRING FINHER LIGHT PIPE		LINK-PP INT'L TECHNOLOGY CO., LIMITED
PART NO.: LP12BC01800	GENNERAL TOLERANCE	UNIT:MM / SIZE:A4
APPROVE: JULY / CHECK: Kevin / DRAW: Kevin	.X±0.25, .X±1°, .XX±0.15, .XX±5°, .XXX±0.10	SCALE:1:1 / SHEET:1/3 / REV:A

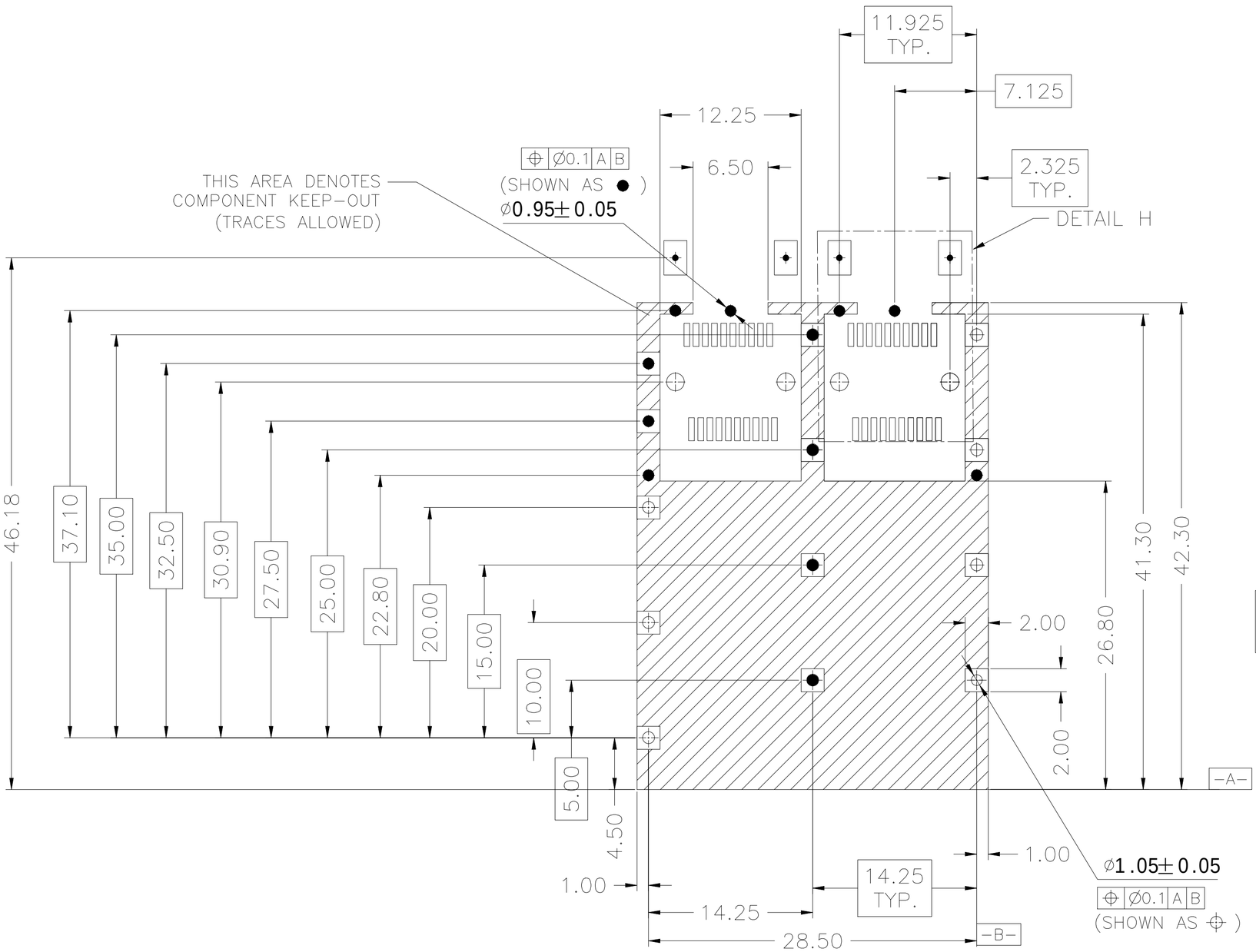

PCB LAYOUT
FOR SINGLE SIDE MOUNTING

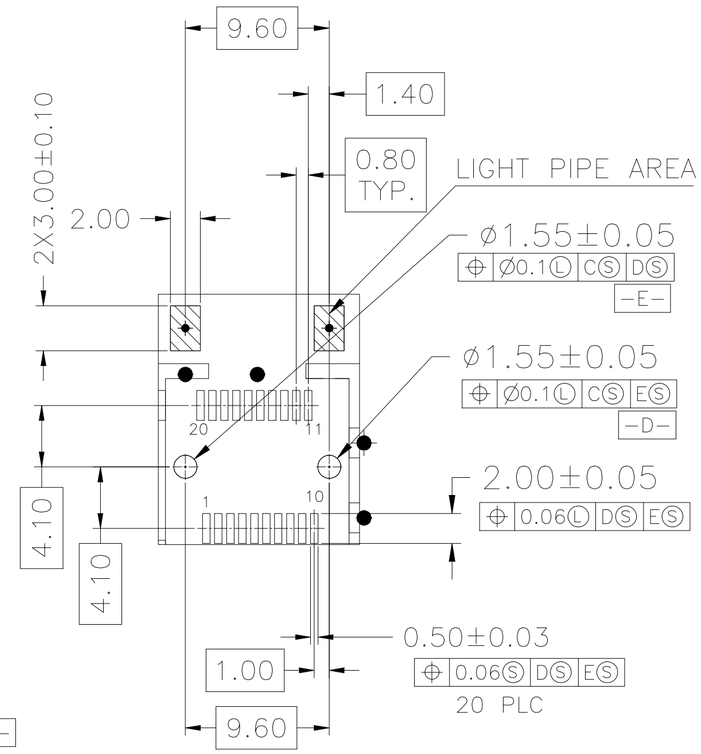

DETAIL H
RECOMMENDED CONNECTOR LAYOUT
2X INDIVIDUALLY

RoHS
2011/65/EU

TITLE: SFP+ 1X2 CAGE WITH EMI SPRING FINHER LIGHT PIPE			LINK-PP INT'L TECHNOLOGY CO., LIMITED				
PART NO.: LP12BC01800			GENNERAL TOLERANCE			UNIT:MM	SIZE:A4
APPROVE	CHECK	DRAW	.X±0.25 .XX±0.15 .XXX±0.10	.X±1° .XX±5°	SCALE:1:1	SHEET:2/3	REV:A
JULY	Kevin	Kevin					

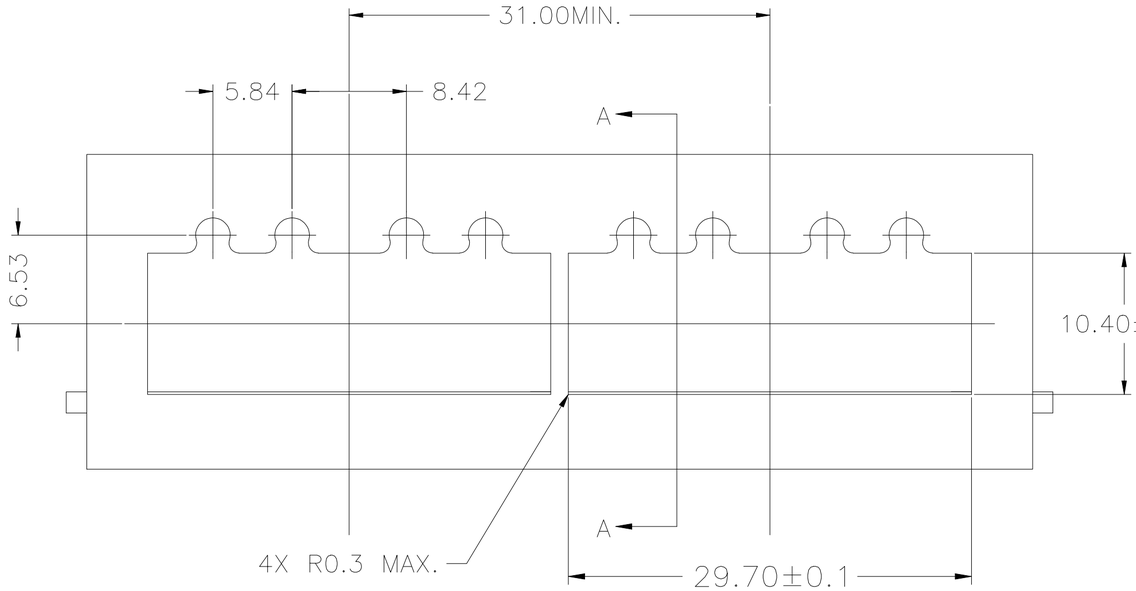

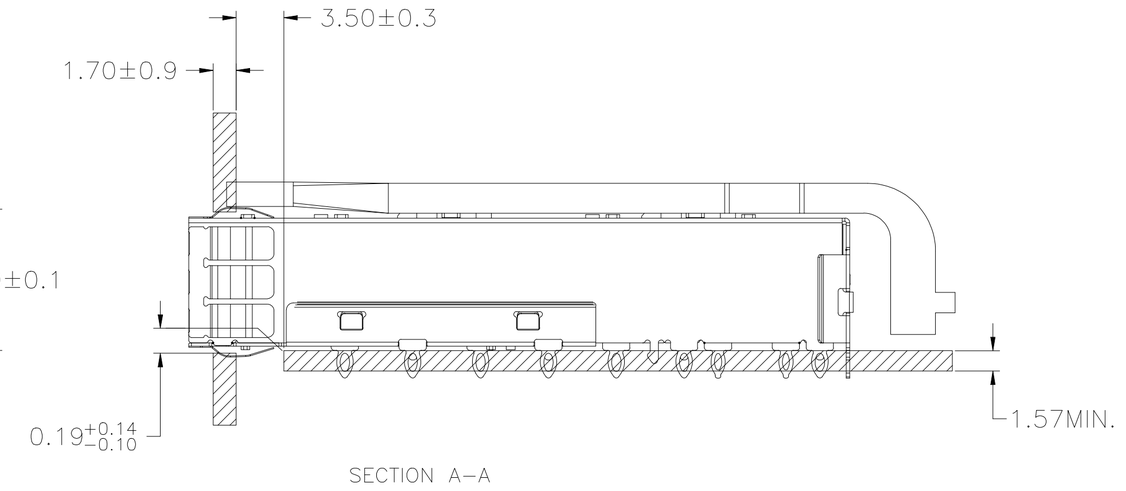

SECTION A–A

RECOMMENDED BEZEL DESIGN
SINGLE SIDED APPLICATIONS

RoHS
2011/65/EU

TITLE: SFP+ 1X2 CAGE WITH EMI SPRING FINHER LIGHT PIPE			LINK-PP INT'L TECHNOLOGY CO., LIMITED				
PART NO. LP12BC01800			GENNERAL TOLERANCE			UNIT:MM	SIZE:A4
APPROVE	CHECK	DRAW	.X±0.25	.X±1°	SCALE:1:1	SHEET:3/3	REV:A
JULY	Kevin	Kevin	.XX±0.15	.XX±5°			
			.XXX±0.10				