REV	DESCRIPTION OF CHANGE	REVIEWED BY	ISSUE DATE
A	FIRST ISSUE	LEO	2021-08-01
A	Appearance change(外观变更)	LEO	2024-09-22

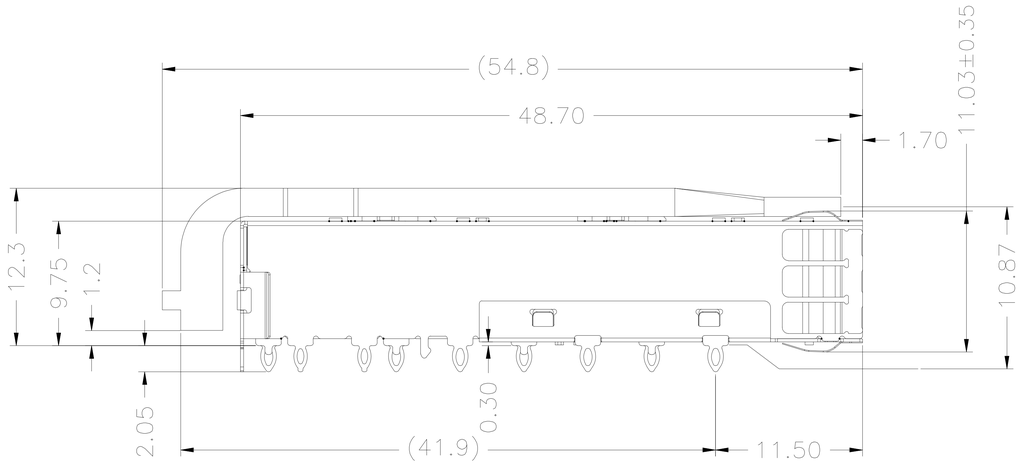

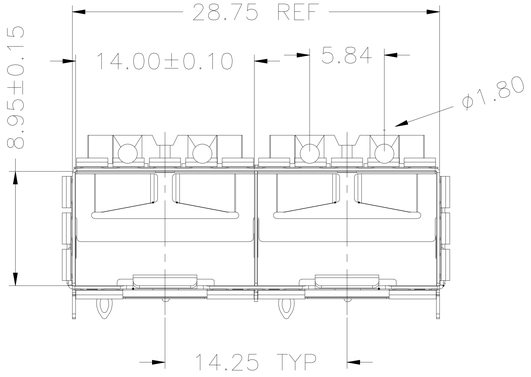

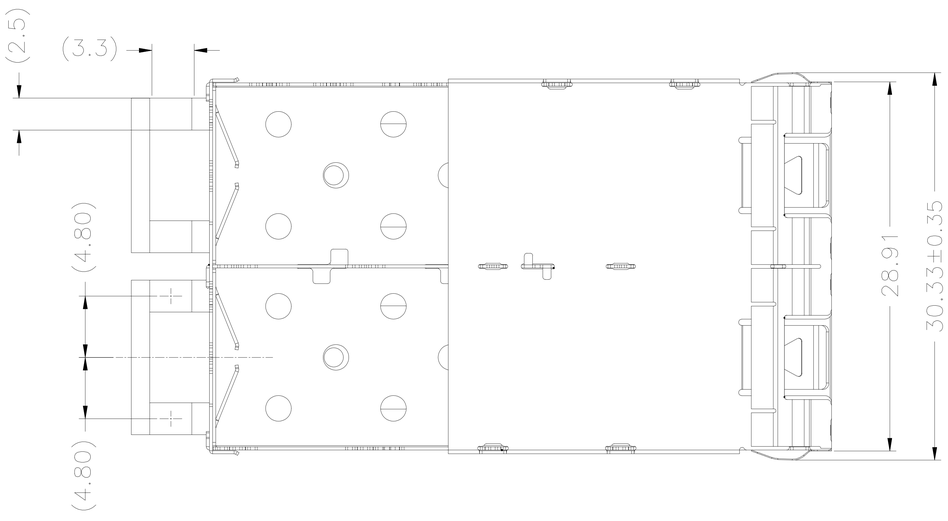

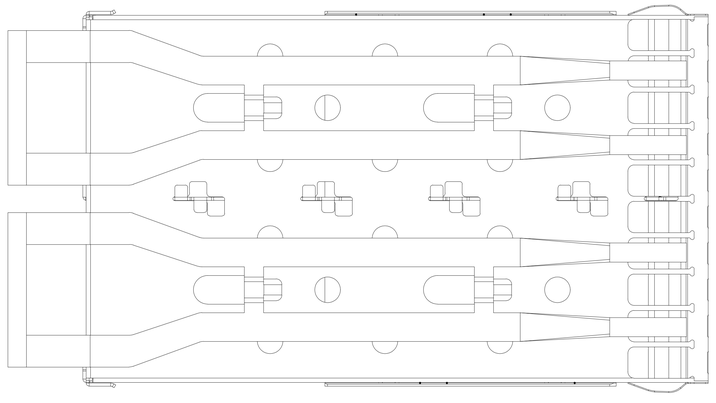

TOP VIEW

NOTES:

1.MATERIAL:
CAGE: COPPER ALLOY, THICKNESS 0.25mm
LIGHT PIPE: CLEAR POLYCARBONATE
2.PACKAGING: TRAY PACKAGING
3.TEMPERATURE RANGE:
OPERATING : −40°C TO +85°C
NON OPERATING : −55°C TO +105°C

RoHS 2011/65/EU

TITLE: SFP+ 1X2 CAGE WITH EMI SPRING FINGER LIGHT PIPE			LINK-PP INT'L TECHNOLOGY CO., LIMITED				
PART NO.: LP12BC01100			GENNERAL TOLERANCE			UNIT:MM	SIZE:A4
APPROVE	CHECK	DRAW	◦ X±0.20	◦ X±1°	SCALE:1:1	SHEET:1/4	REV:A
LEO	JAMES	JAMES	◦ XX±0.15	◦ XX±5°			
			◦ XXX±0.10				

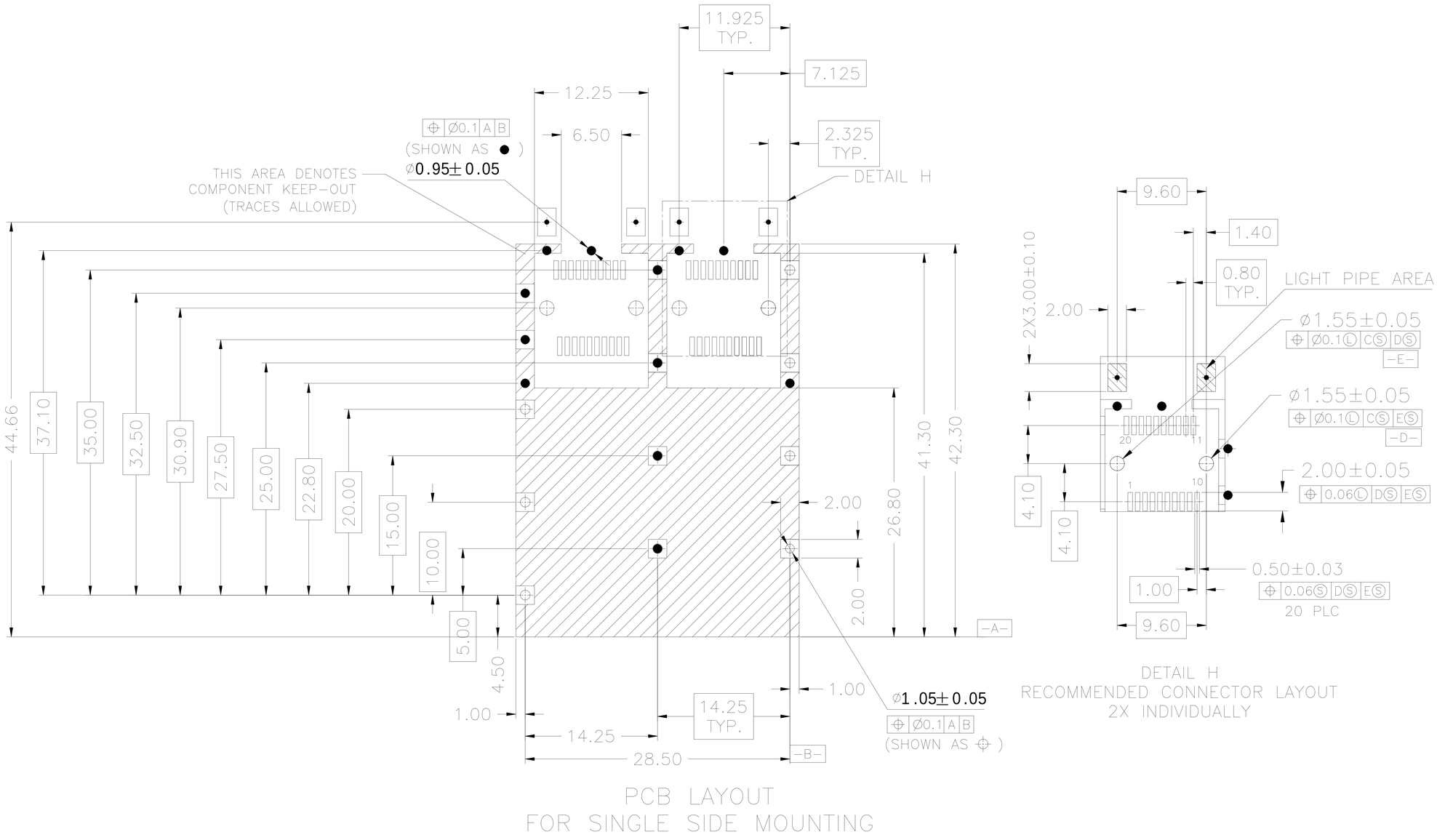

PCB LAYOUT
FOR SINGLE SIDE MOUNTING

RoHS
2011/65/EU

TITLE: SFP+ 1X2 CAGE WITH EMI SPRING FINGER LIGHT PIPE			LINK-PP INT'L TECHNOLOGY CO., LIMITED			
PART NO.: LP12BC01100			GENNERAL TOLERANCE		UNIT:MM	SIZE:A4
APPROVE	CHECK	DRAW	◦ X±0.20	◦ X±1°	SCALE:1:1	SHEET:2/4 REV:A
LEO	JAMES	JAMES	◦ XX±0.15	◦ XX±5°		
			◦ XXX±0.10			

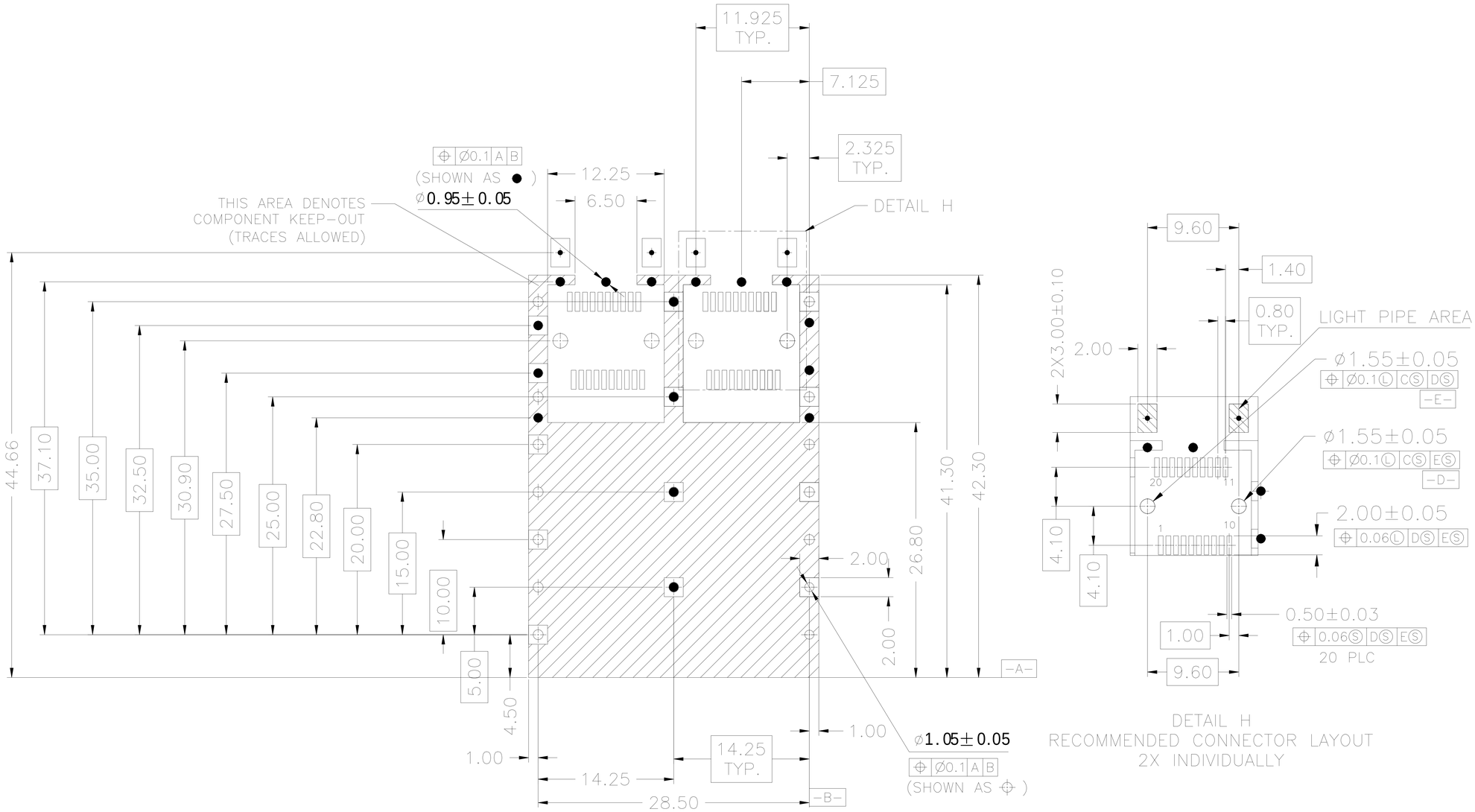

DETAIL H
RECOMMENDED CONNECTOR LAYOUT
2X INDIVIDUALLY

PCB LAYOUT
FOR BELLY TO BELLY SIDE MOUNTING

RoHS
2011/65/EU

TITLE: SFP+ 1X2 CAGE WITH EMI SPRING FINGER LIGHT PIPE			LINK-PP INT'L TECHNOLOGY CO., LIMITED			
PART NO. LP12BC01100			GENNERAL TOLERANCE		UNIT:MM	SIZE:A4
APPROVE	CHECK	DRAW	◦ X±0.20	◦ X±1°	SCALE:1:1	SHEET:3/4	REV:A
LEO	JAMES	JAMES	◦ XX±0.15	◦ XX±5°			
			◦ XXX±0.10				

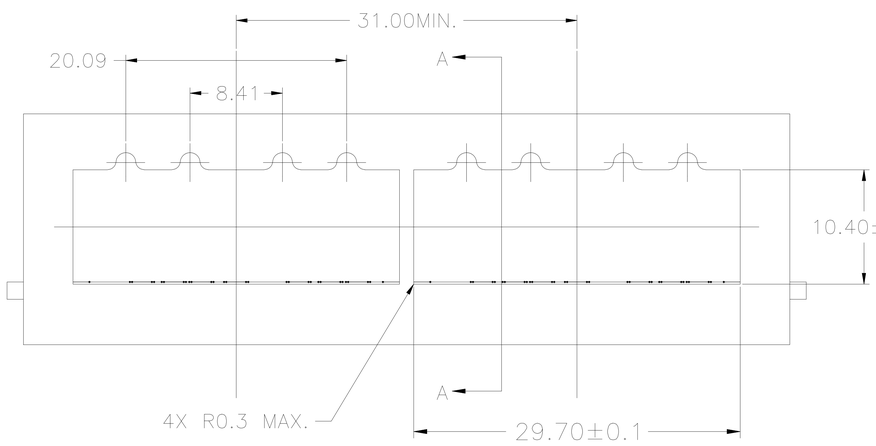

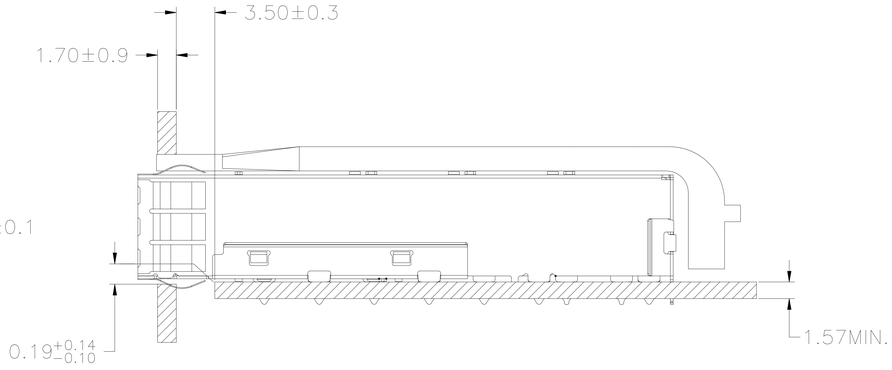

SECTION A–A

RECOMMENDED BEZEL DESIGN
SINGLE SIDED APPLICATIONS

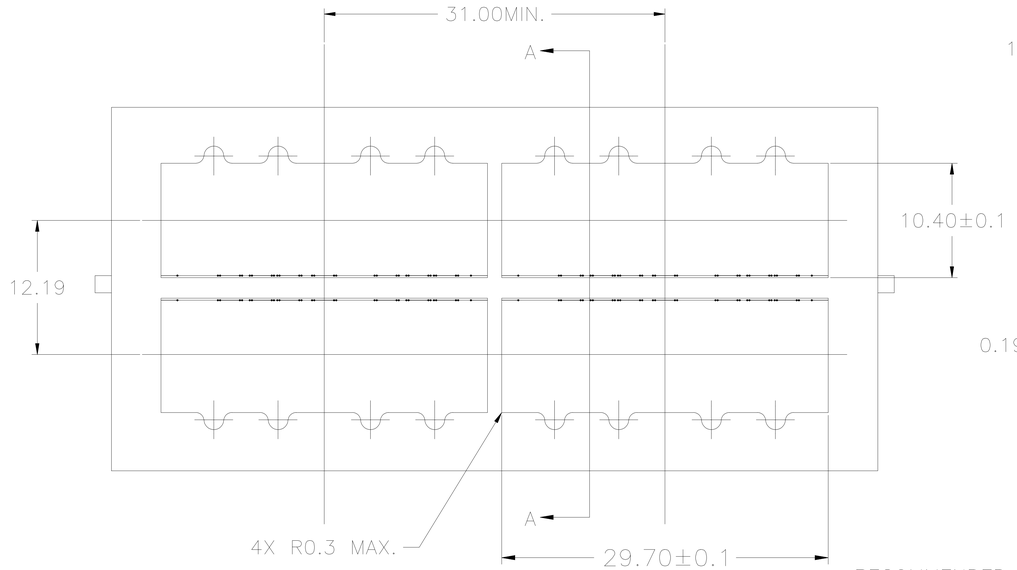

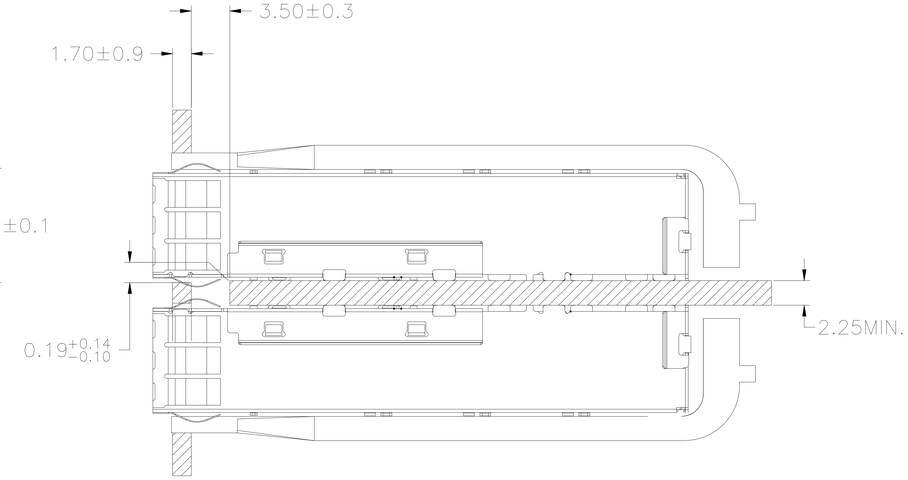

SECTION A–A

RECOMMENDED BEZEL DESIGN
BELLY TO BELLY APPLICATIONS

RoHS
2011/65/EU

TITLE: SFP+ 1X2 CAGE WITH EMI SPRING FINGER LIGHT PIPE			LINK-PP INT'L TECHNOLOGY CO., LIMITED				
PART NO.: LP12BC01100			GENNERAL TOLERANCE			UNIT:MM	SIZE:A4
APPROVE	CHECK	DRAW	◦ X±0.20	◦ X±1°	SCALE:1:1	SHEET:4/4	REV:A
LEO	JAMES	JAMES	◦ XX±0.15	◦ XX±5°			
			◦ XXX±0.10				