REV.	DESCRIPTION OF CHANGE	REVIEWED BY	ISSUE DATE
A	FIRST ISSUE	XUAN	2025-11-12

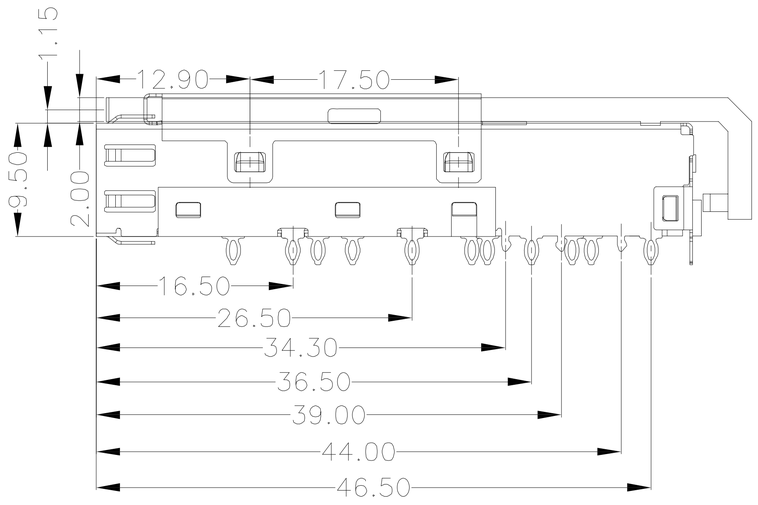

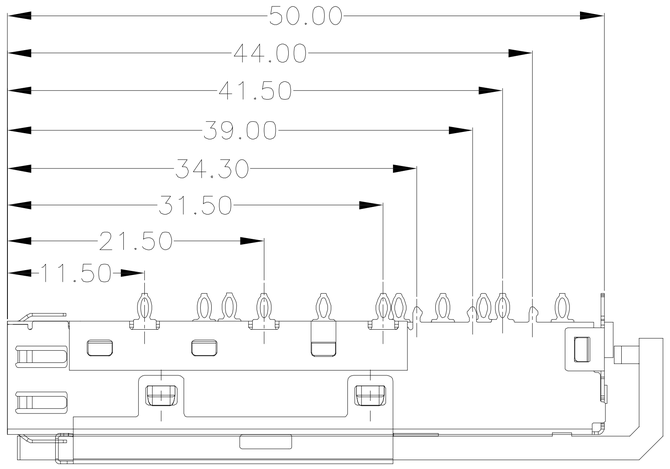

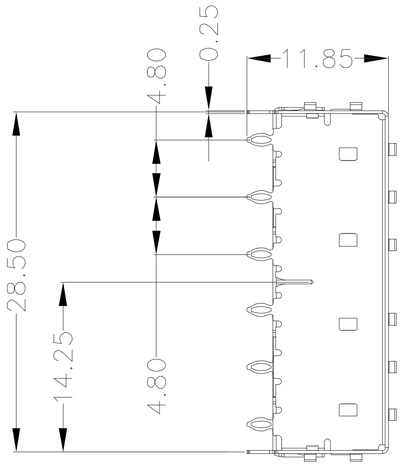

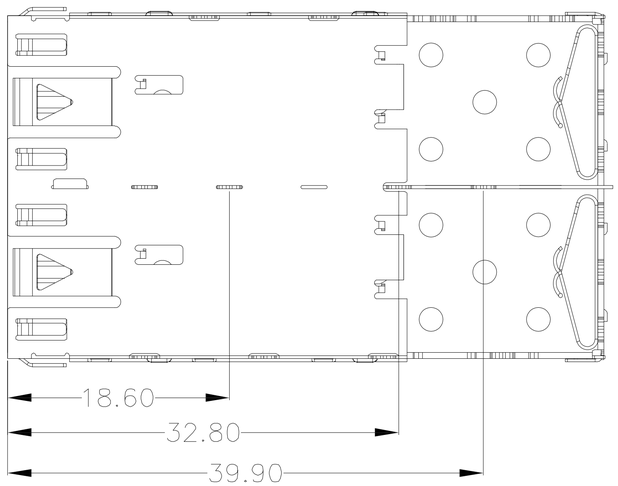

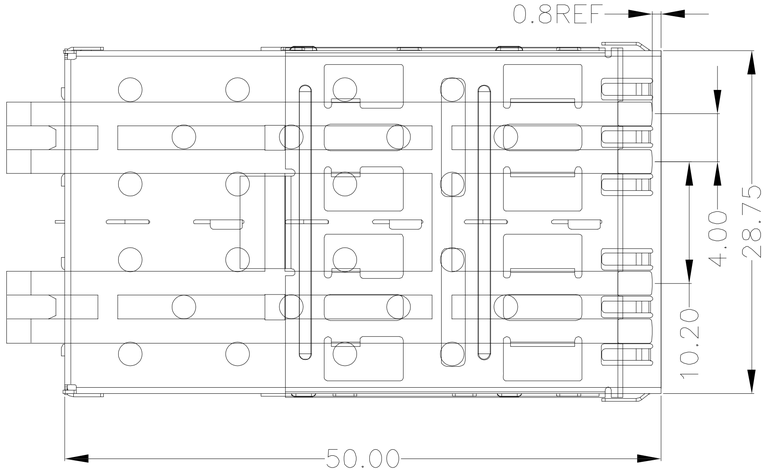

NOTES:
MECHANICAL:
CAGES: COPPER ALLOY, THICKNESS 0.25MM.NICKEL PLATING.
LIGHT PIPE: PC
THISCAGE IS FORSINGLE SIDEUSE ONLY.
TEMPERATURE:
OPERATION: −40℃～+85℃
STORAGE: −40℃～+85℃
ROHS COMPLIANCE.

RoHS 2011/65/EU

TITLE: SFP 1X2 CAGE WITH EMI SPRING FINGER & LIGHT PIPE		LINK-PP INT'L TECHNOLOGY CO., LIMITED
PART NO.: LP12AC02R100BSZ	GENNERAL TOLERANCE	UNIT:MM / SIZE:A4
APPROVE: XUAN / CHECK: Kevin / DRAW: Kevin	.X±0.25, .X±1°; .XX±0.15, .XX±5°; .XXX±0.10	SCALE:1:1 / SHEET:1/3 / REV:A

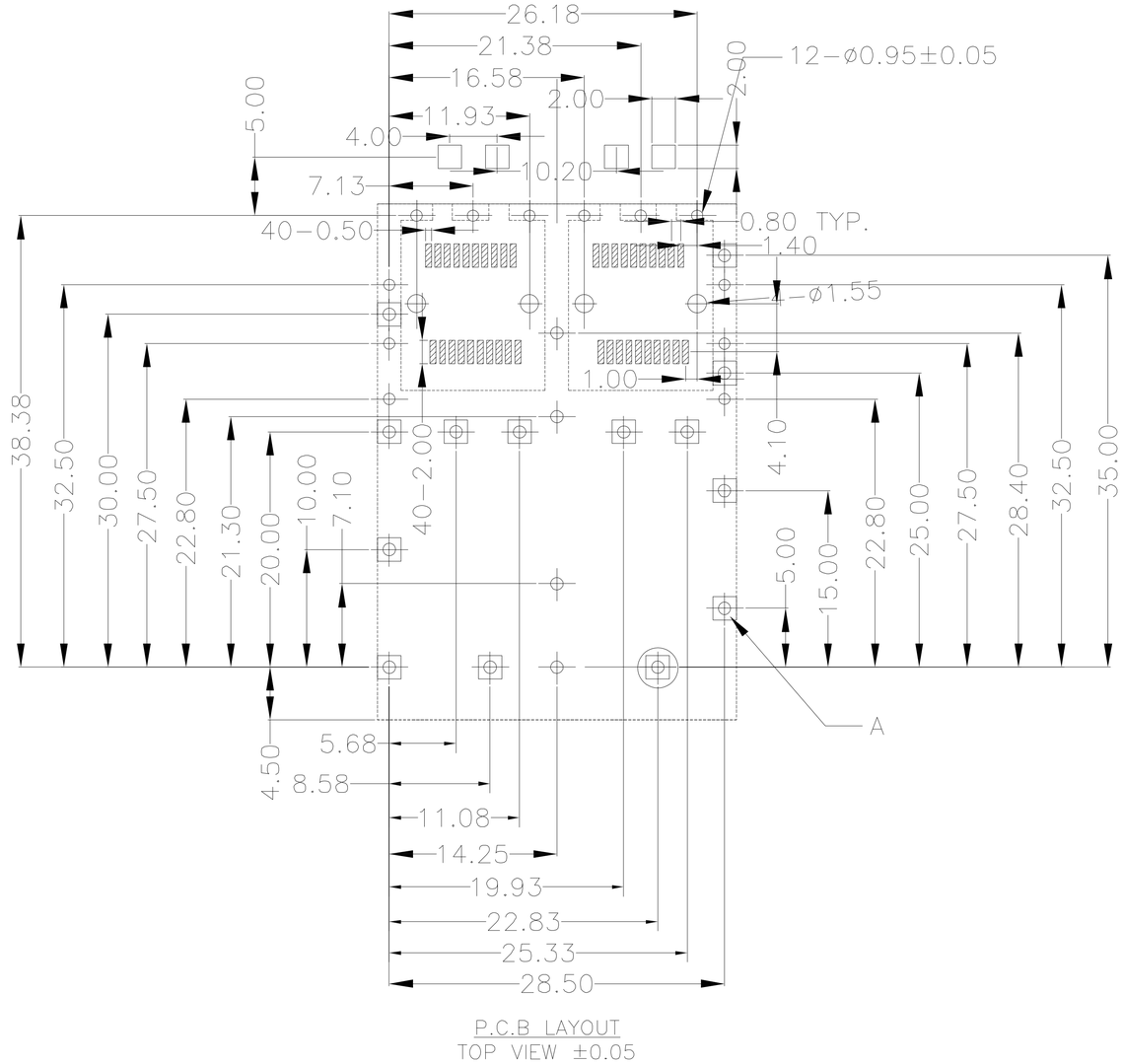

P.C.B LAYOUT
TOP VIEW ±0.05

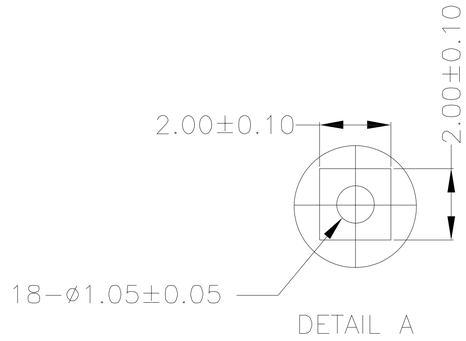

DETAIL A

RoHS 2011/65/EU

TITLE: SFP 1X2 CAGE WITH EMI SPRING FINGER & LIGHT PIPE			LINK-PP INT'L TECHNOLOGY CO., LIMITED				
PART NO. LP12AC02R100BSZ			GENNERAL TOLERANCE			UNIT:MM	SIZE:A4
APPROVE	CHECK	DRAW	.X±0.25	.X±1°	SCALE:1:1	SHEET:2/3	REV:A
XUAN	Kevin	Kevin	.XX±0.15	.XX±5°			
			.XXX±0.10				

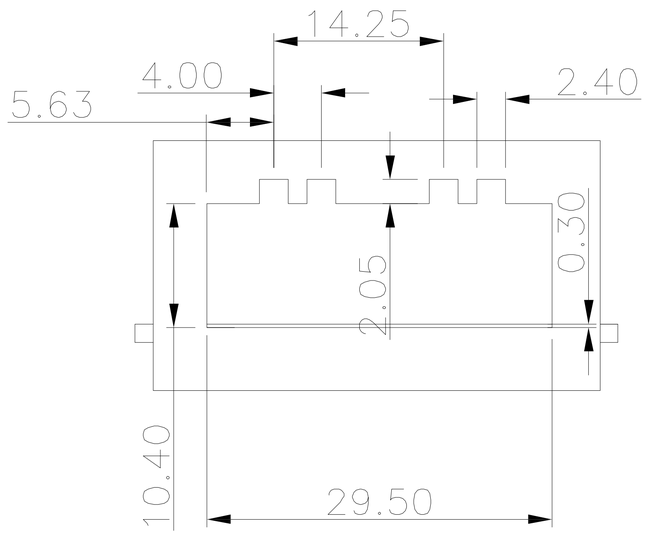

RECOMMENDED BEZEL CUT-OUT SINGLE SIDED APPLICATIONS

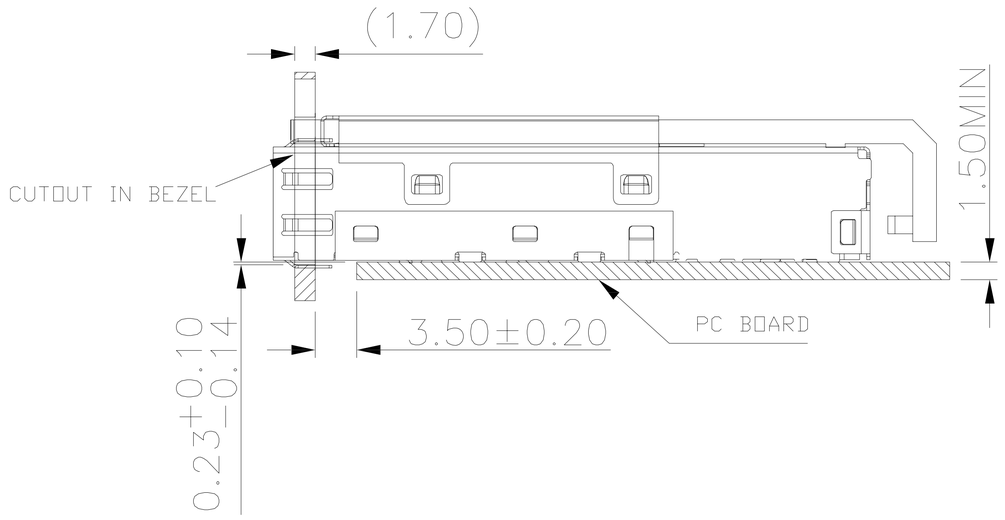

MOUNTED ON PC BOARD
SHOWN THRU RECOMMEND BEZEL

RoHS 2011/65/EU

TITLE: SFP 1X2 CAGE WITH EMI SPRING FINGER & LIGHT PIPE			LINK-PP INT'L TECHNOLOGY CO., LIMITED				
PART NO.: LP12AC02R100BSZ			GENNERAL TOLERANCE			UNIT:MM	SIZE:A4
APPROVE	CHECK	DRAW	.X±0.25	.X±1°	SCALE:1:1	SHEET:3/3	REV:A
XUAN	Kevin	Kevin	.XX±0.15	.XX±5°			
			.XXX±0.10				