REV	DESCRIPTION OF CHANGE	REVIEWED BY	ISSUE DATE
A	FIRST ISSUE	LEO	2021-09-12

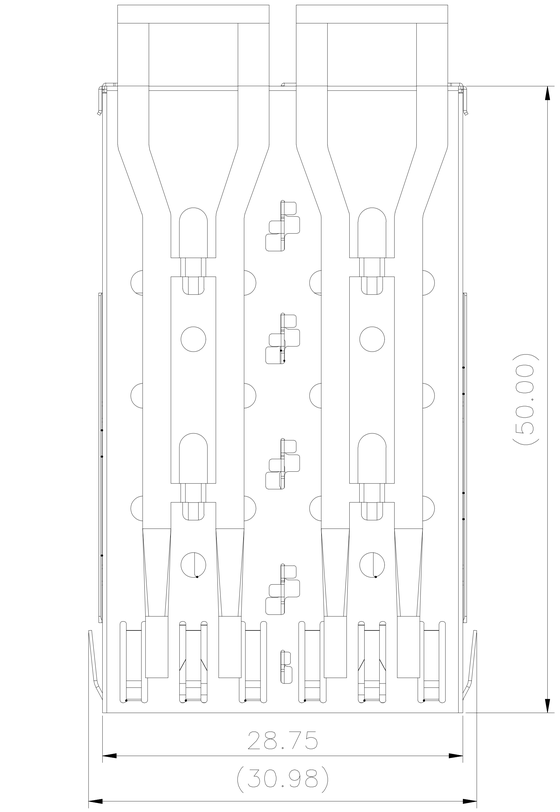

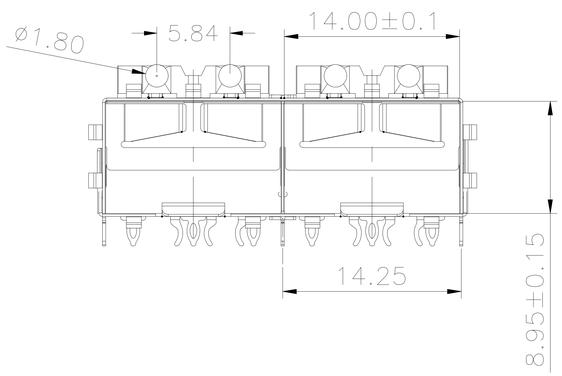

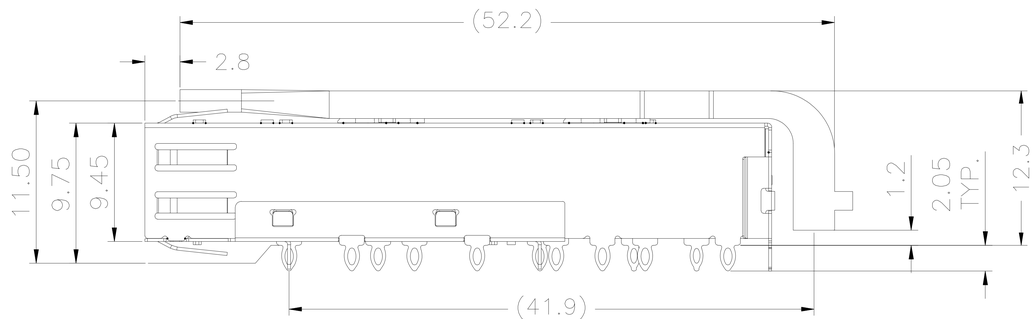

NOTES:

1.MATERIAL: COPPER ALLOY, NI-PLATED
LIGHT PIPE: PC,THANSPARENT

2.PACKAGING: TRAY PACKAGING

3.TEMPERATURE RANGE: -55°C TO +105°C

RoHS
2011/65/EU

TITLE	SFP 1X2 CAGE WITH EMI SPRING FINGER LIGHT PIPE	LINK-PP INT'L TECHNOLOGY CO., LIMITED
PART NO.	LP12AC02800B	GENNERAL TOLERANCE

APPROVE	CHECK	DRAW
LEO	JAMES	JAMES

◦ X±0.20	◦ X±1°	SCALE:1:1	UNIT:MM	SIZE:A4
◦ XX±0.15	◦ XX±5°			
◦ XXX±0.10		SHEET:1/3		REV:A

RECOMMENDED PCB CONFIGURATION
WITH KEEP-OUT AREAS
SINGLE SIDED APPLICATIONS

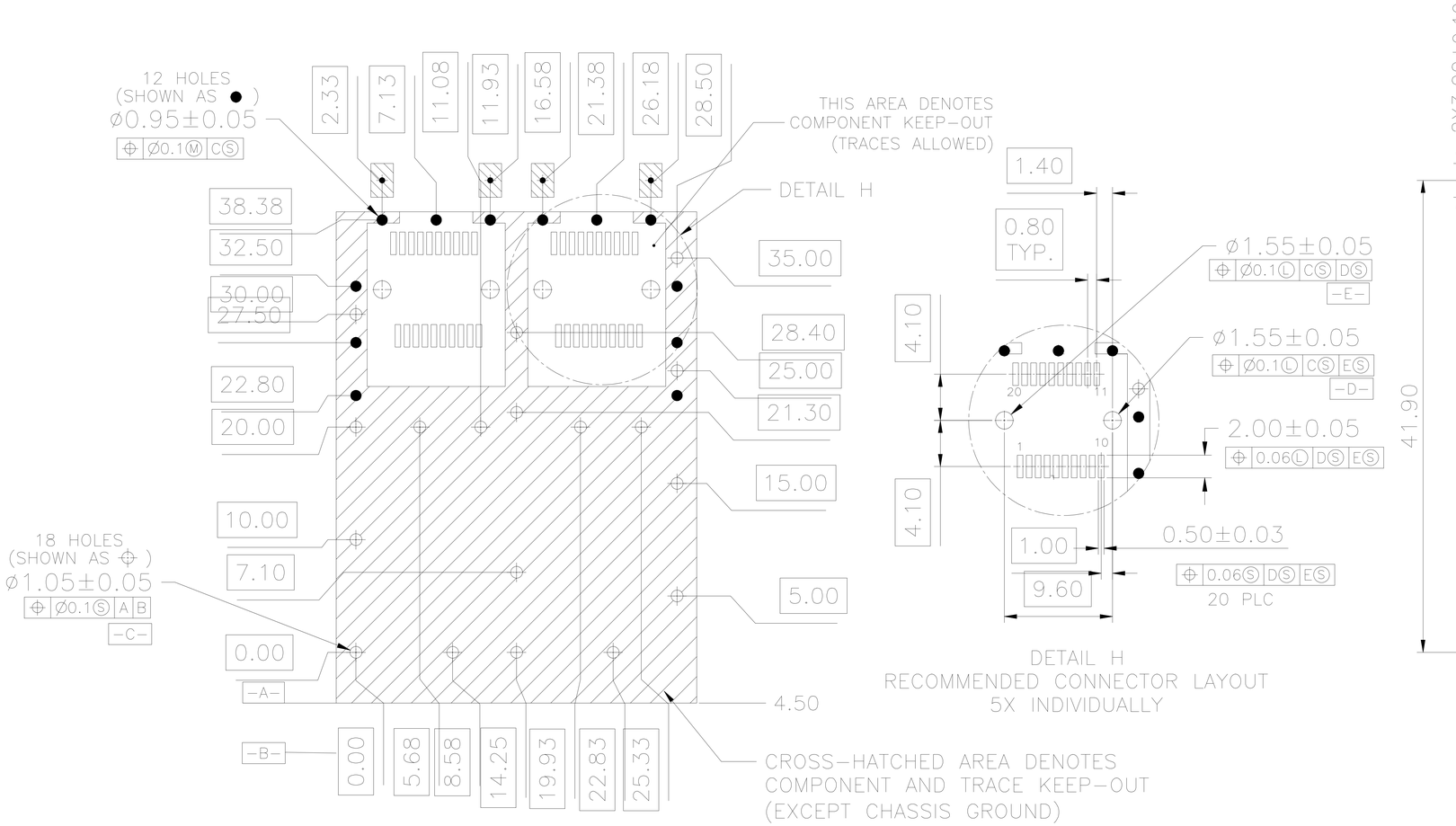

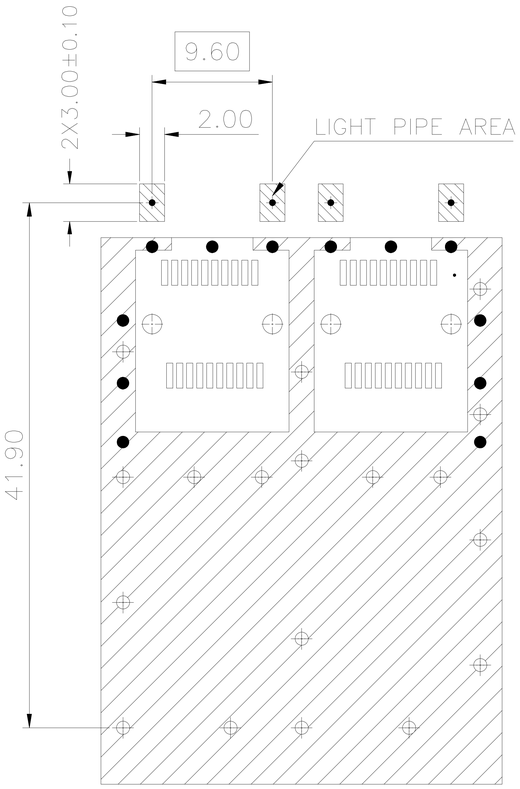

RoHS
2011/65/EU

TITLE: SFP 1X2 CAGE WITH EMI SPRING FINGER LIGHT PIPE			LINK-PP INT'L TECHNOLOGY CO., LIMITED			
PART NO.: LP12AC02800B			GENNERAL TOLERANCE		UNIT:MM	SIZE:A4
APPROVE	CHECK	DRAW	◦ X±0.20	◦ X±1°	SCALE:1:1	SHEET:1/3	REV:A
LEO	JAMES	JAMES	◦ XX±0.15	◦ XX±5°			
			◦ XXX±0.10				

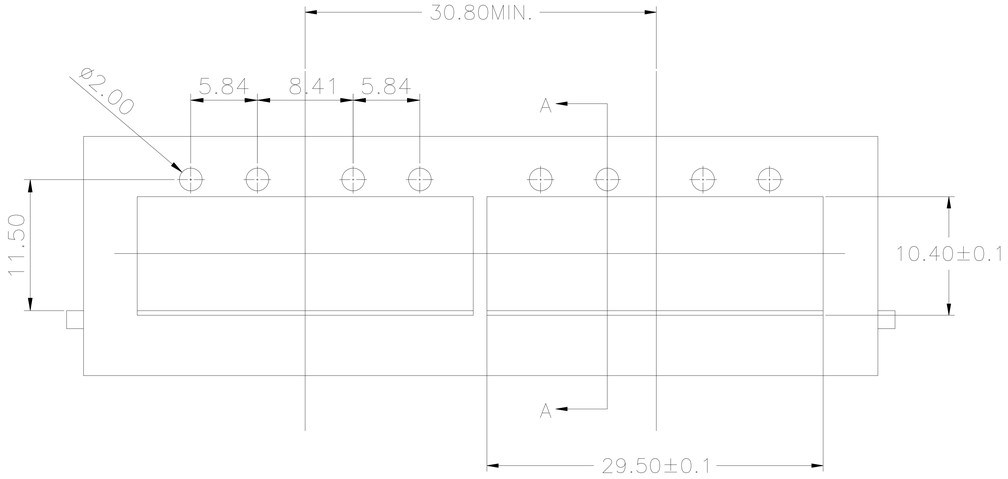

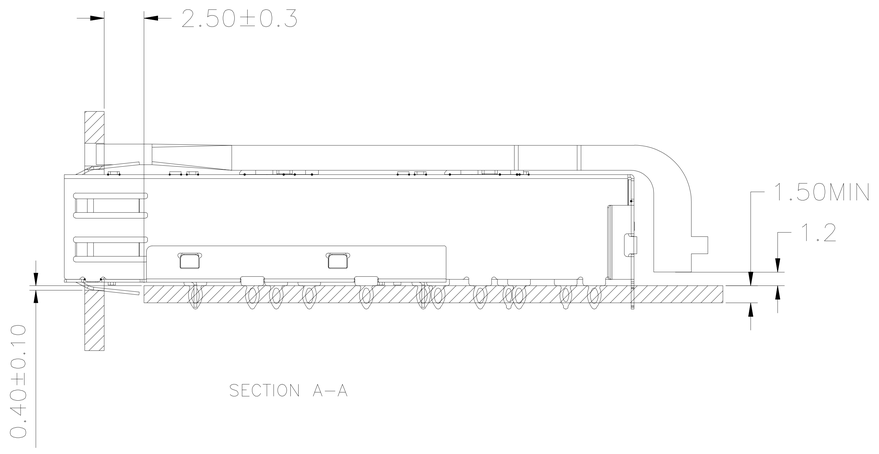

SECTION A–A

RECOMMENDED BEZEL DESIGN
SINGLE SIDED APPLICATIONS

RoHS
2011/65/EU

TITLE: SFP 1X2 CAGE WITH EMI SPRING FINGER LIGHT PIPE			LINK-PP INT'L TECHNOLOGY CO., LIMITED				
PART NO.: LP12AC02800B			GENNERAL TOLERANCE			UNIT:MM	SIZE:A4
APPROVE	CHECK	DRAW	◦ X±0.20	◦ X±1°	SCALE:1:1	SHEET:1/3	REV:A
LEO	JAMES	JAMES	◦ XX±0.15	◦ XX±5°			
			◦ XXX±0.10				