REV.	DESCRIPTION OF CHANGE	REVIEWED BY	ISSUE DATE
A	FIRST ISSUE	LEO	2022-11-15

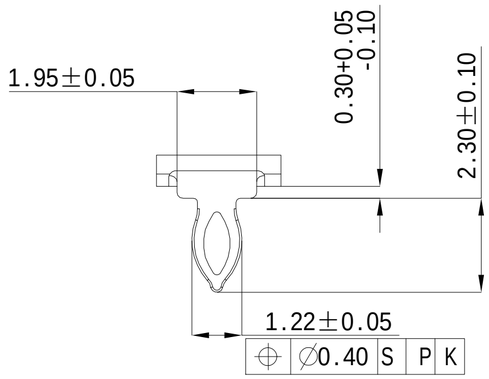

Local view B
Ratio 5:1

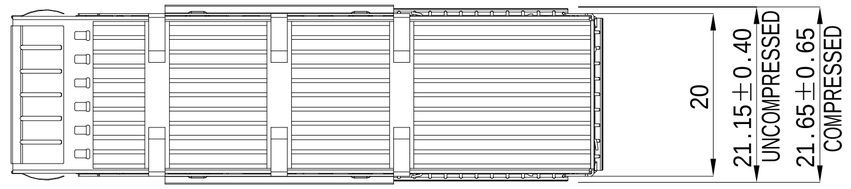

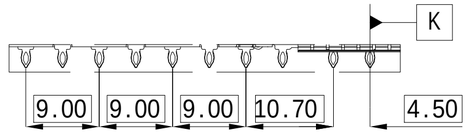

Local view A

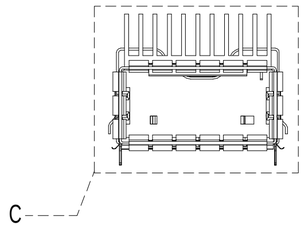

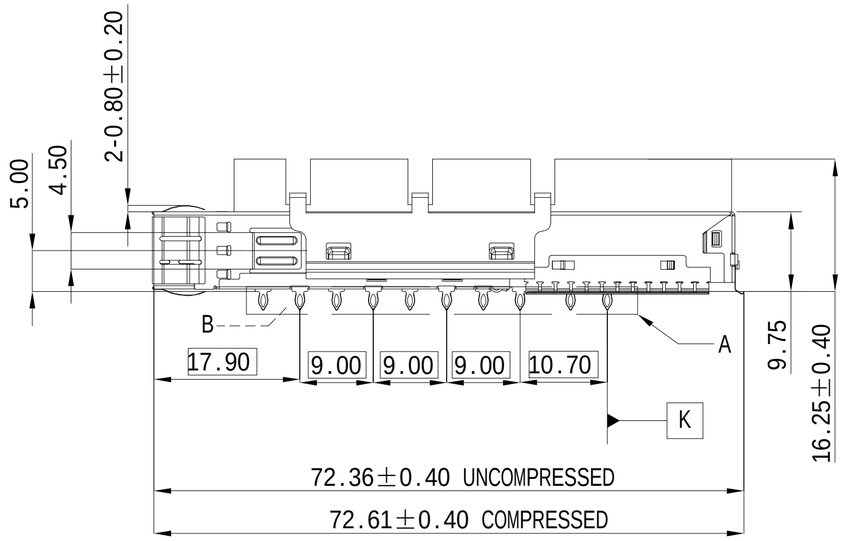

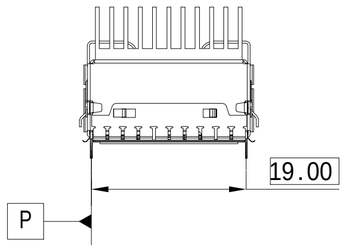

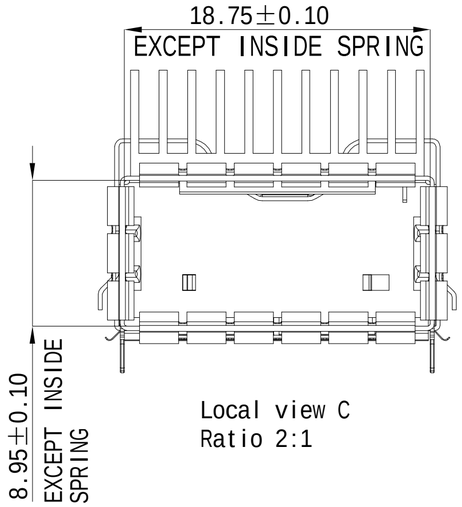

Local view C
Ratio 2:1

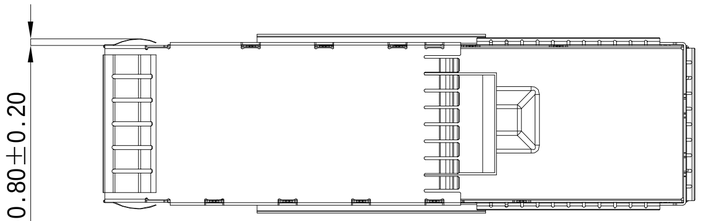

NOTES:
1. MATERIAL:
   TOP CAGE:STAINLESS STEEL,
   BOTTOM CAGE:COPPER ALLOY,
   EMI SPRING FINGERS: COPPER ALLOY;
   HEAT SINK: ALUMINUM;
2. FINISH:
   TOP CAGE:NO PLATING,
   BOTTOM CAGE:NICKEL PLATING OVERALL,
   EMI SPRING FINGERS:NICKEL PLATING OVERALL;
   HEAT SINK:ANODIZING(BLACK);
3. PACKAGING:
   PRODUCT PACKEAGED IN TRAYS AND CARTONS.

RoHS 2011/65/EU

TITLE			LINK-PP INT'L TECHNOLOGY CO., LIMITED				
QSFP-DD 1X1 CAGE WITH EMI SPRING FINGER HEAT SINK							
PART NO. LP11GC01070M			GENNERAL TOLERANCE			UNIT:MM	SIZE:A4
APPROVE	CHECK	DRAW	.X±0.25	.X±1°	SCALE:1:1	SHEET:1/2	REV:A
LEO	Kevin	Kevin	.XX±0.15	.XX±5°			
			.XXX±0.10				

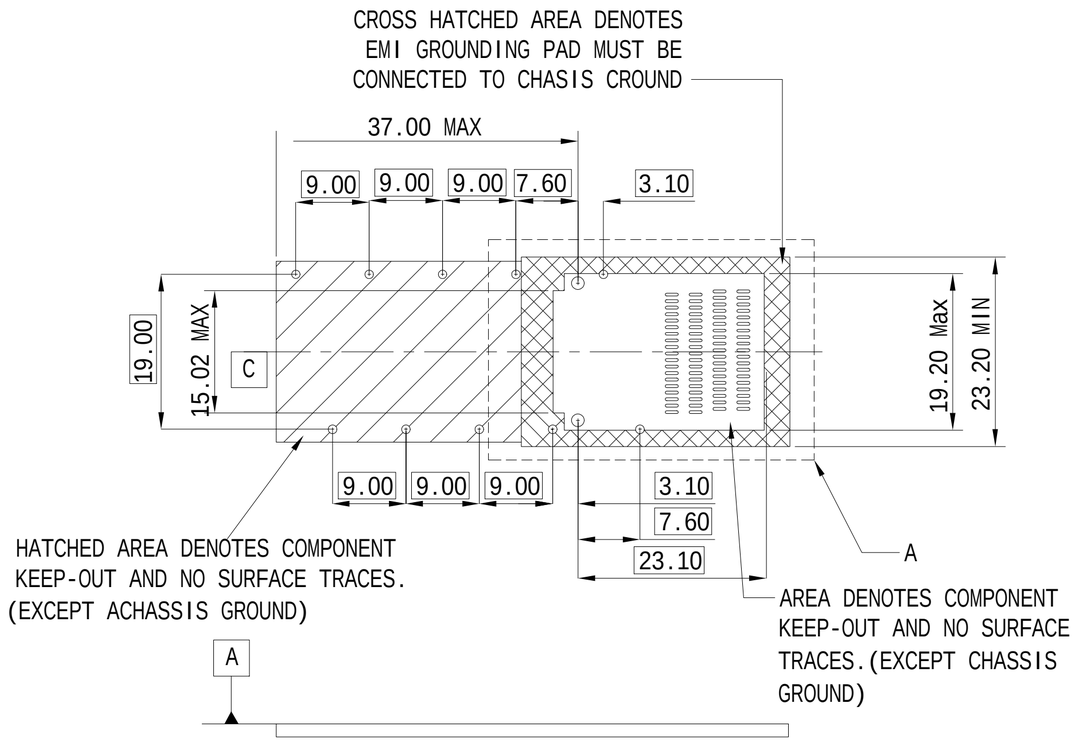

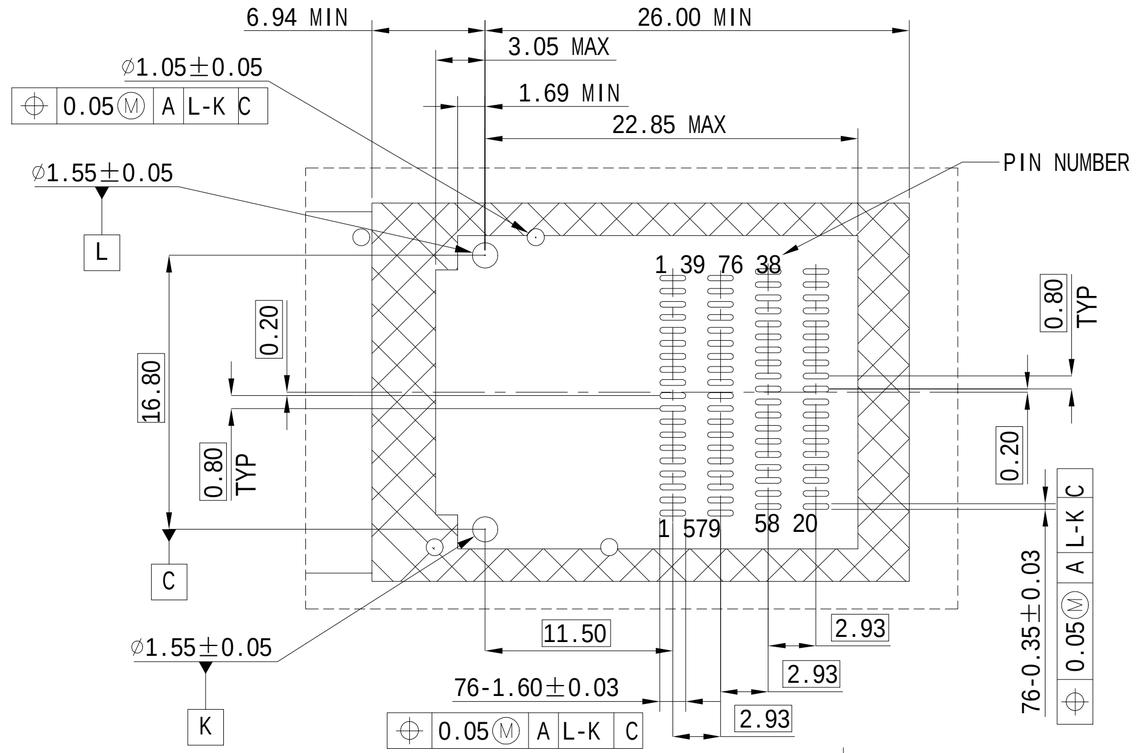

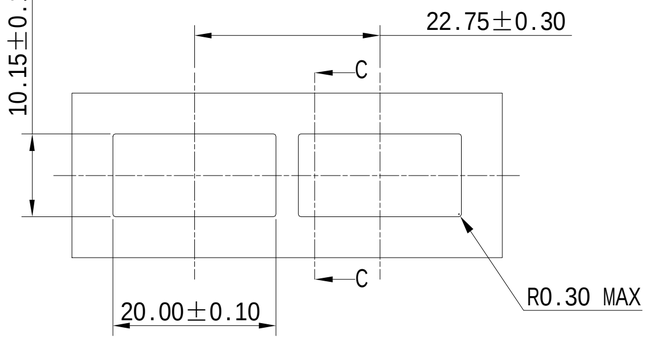

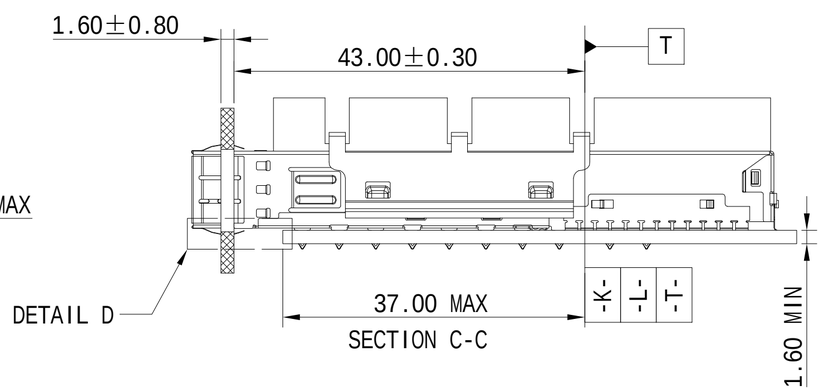

Local view C
Ratio 2:1

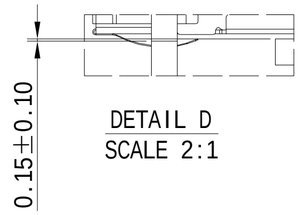

NOTES:
1. SEE QSFP-DD MSA SPECIFICATION FOR BEZEL LOCATION TOLERANCE
2. DATUM -A- IS TIP SURFACE OF HOST BOARD PER MSA
3. FINISHED HOLE SIZE (AFTER PLATING)
4. DATUM -K- IS HOST BOARD THRE HOLE #1 TO ACCEPT CONNECTOR GUIDE POST PER MSA
5. DATUM -L- IS HOST BOARD THRE HOLE #2 TO ACCEPT CONNECTOR GUIDE POST PER MSA
6. DATUM -T- IS HARD STOP ON CAGE PER MSA

RoHS 2011/65/EU

TITLE: QSFP-DD 1X1 CAGE WITH EMI SPRING FINGER HEAT SINK			LINK-PP INT'L TECHNOLOGY CO., LIMITED				
PART NO.: LP11GC01070M			GENNERAL TOLERANCE			UNIT:MM	SIZE:A4
APPROVE	CHECK	DRAW	.X±0.25	.X±1°	SCALE:1:1	SHEET:2/2	REV:A
LEO	Kevin	Kevin	.XX±0.15	.XX±5°			
			.XXX±0.10				