REV.	DESCRIPTION OF CHANGE	REVIEWED BY	ISSUE DATE
A	FIRST ISSUE	XUAN	2025-12-20

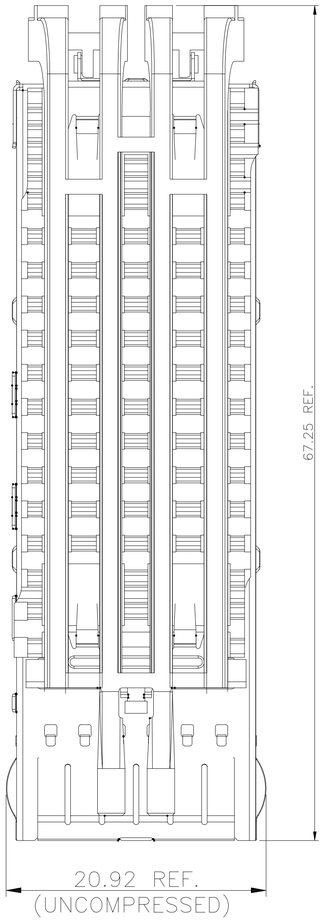

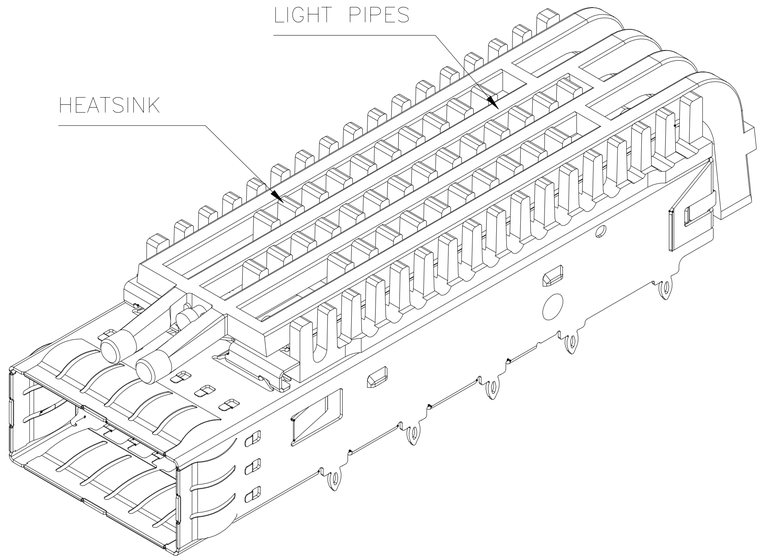

1. MATERIALS:
   BODY CAGE: STAINLESS STEEL, 0.25 THICKNESS
   EMI FINGER: STAINLESS STEEL
   HEATSINK: ALUMINUM
   HEATSINK CLIP: STAINLESS STEEL

2. SURFACE FINISH:
   BODY CAGE: CLEANING
   EMI SPRING: CLEANING AND HOLE SEALING
   HEATSINK: BLACK ANODIZED
   HEATSINK CLIP: CLEANING

3. MATE WITH QSFP MSA COMPATIBLE TRANSCEIVER.

4. REFERENCE DOCUMENTS:
   PRODUCT SPECIFICATION: QSFP MSA

5. THIS PRODUCT COMPLY TO ROHS DIRECTIVE 2011/65/EU.

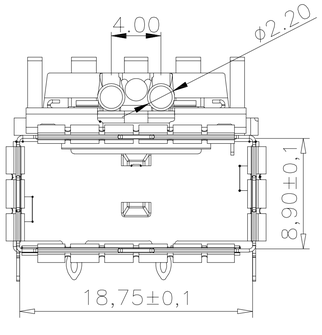

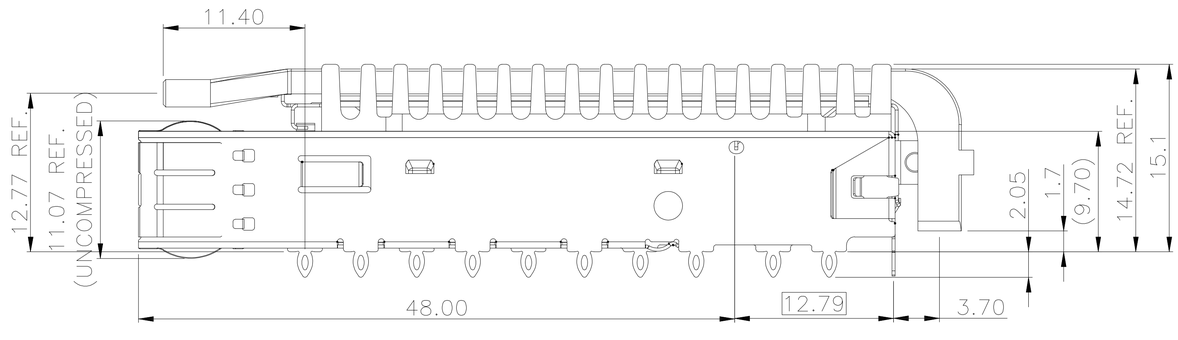

RoHS 2011/65/EU

TITLE			QSFP28 1X1 CAGE WITH EMI SPRING FINGER & LIGHT PIPE & HEAT SINK			LINK-PP INT'L TECHNOLOGY CO., LIMITED	
PART NO.			LP11FC0141OS-R2	GENNERAL TOLERANCE		UNIT:MM	SIZE:A4
APPROVE	CHECK	DRAW		.X±0.25	.X±1°	SCALE:1:1	SHEET:1/3	REV:A
XUAN	Kevin	Kevin		.XX±0.15	.XX±5°			
				.XXX±0.10				

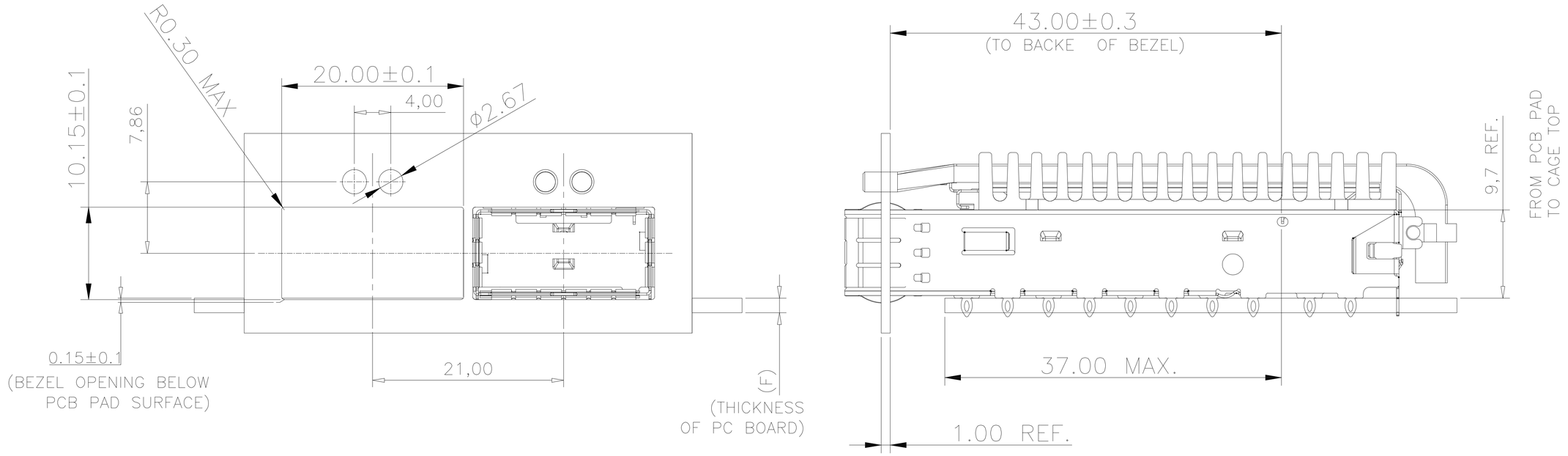

BEZEL AND BOARD POSITION DIMENSION FOR SINGLE SIDE MOUNTING

NOTES:

1. THE NORMAL THICKNESS OF CUSTOMER SUPPLIED PC BOARD.(DIM. "F")
   SINGLE SIDED PC BOARD THICKNESS: 1.60mm MIN.
   BELLY TO BELLY PC BOARD MIN. THICKNESS: 3.0mm MIN.
2. GENERAL TOLERANCE: ±0.05.

RoHS 2011/65/EU

TITLE: QSFP28 1X1 CAGE WITH EMI SPRING FINGER & LIGHT PIPE & HEAT SINK			LINK-PP INT'L TECHNOLOGY CO., LIMITED				
PART NO.: LP11FC0141OS-R2			GENNERAL TOLERANCE			UNIT:MM	SIZE:A4
APPROVE	CHECK	DRAW	.X±0.25	.X±1°	SCALE:1:1	SHEET:2/3	REV:A
XUAN	Kevin	Kevin	.XX±0.15	.XX±5°			
			.XXX±0.10				

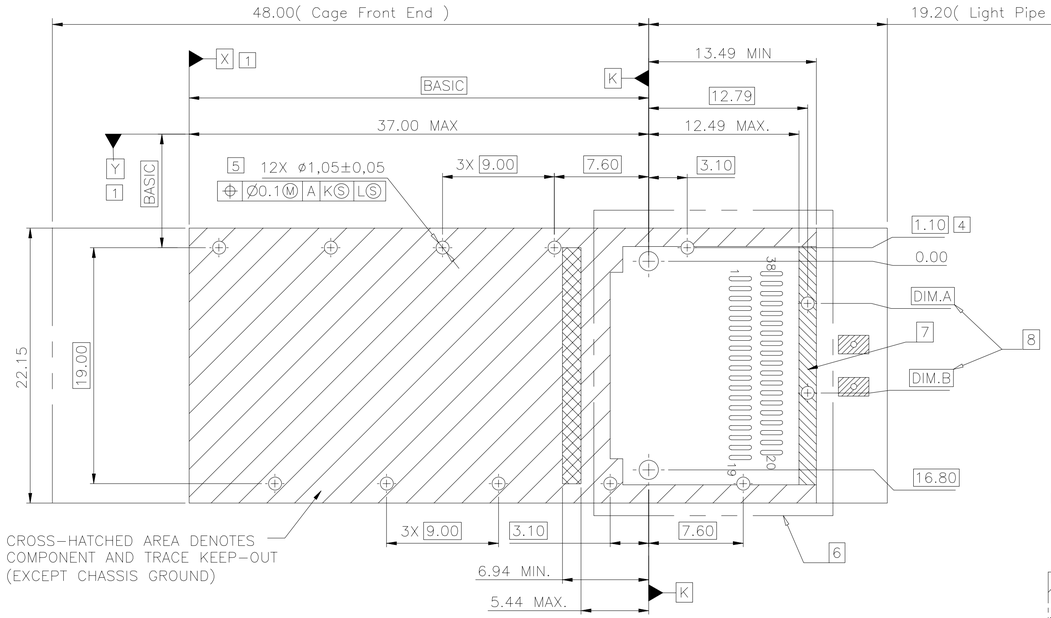

RECOMMENDED SINGLE SIDE PC BOARD LAYOUT

NOTES:

1. DATUM X & Y ARE ESTABLISHED BY THE CUSTOMER'S FIDUCIAL
2. DATUM A IS THE TOP SURFACE OF THE HOST BOARD
3. LOCATION OF THE EDGE OF PCB IS APPLICATION SPECIFIC
4. BASELINE FOR THESE DIMENSIONS IS THE CENTER OF COMPLIANT PIN HOLE.
5. FINISHED HOLE SIZE
6. REFER TO SFF8662 FOR CONNECTOR FOOTING DIMENSIONS
7. SURFACE TRACES PERMITTED WITHIN THIS SHADED AREA
8. INDICATED HOLES ARE OPTIONAL (SEE TABLE ROR REAR PIN CONFIGURATION)

	# OF REAR PIN PER PORT	DIM.A	DIM.B	DIM.C
OPTION 1	2 REAR LEGS	3.40	10.60	N/A

FOR CAGE ASSEMBLIES WITH LIGHT PIPES

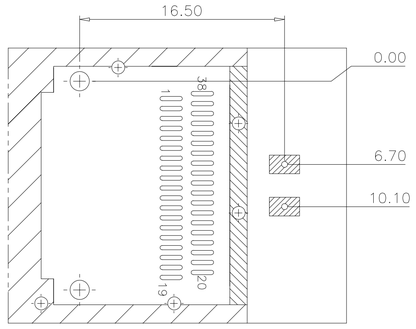

LIGHT PIPE LED LOCATION

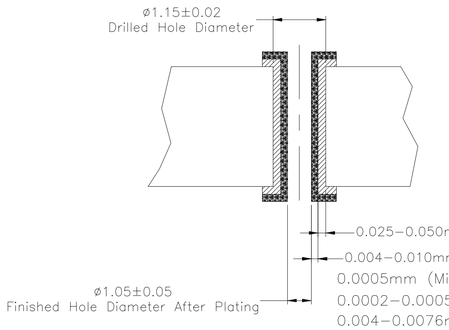

0.025–0.050mm Copper Plating
0.004–0.010mm Hot Air Solder Leveling (HASL) Tin–Lead (SnPb)
0.0005mm (Min) Immersion Tin (Sn)
0.0002–0.0005mm Organic Solderability Preservative (OSP)
0.004–0.0076mm Nickel (Ni), 0.0001–0.0005 Immersion Gold (Au)

FINISHED HOLE SIZE SPECS

RoHS 2011/65/EU

TITLE	QSFP28 1X1 CAGE WITH EMI SPRING FINGER & LIGHT PIPE & HEAT SINK	LINK-PP INT'L TECHNOLOGY CO., LIMITED
PART NO.	LP11FC0141OS-R2	GENNERAL TOLERANCE

APPROVE	CHECK	DRAW
XUAN	Kevin	Kevin

.X±0.25	.X±1°
.XX±0.15	.XX±5°
.XXX±0.10	

SCALE:1:1	UNIT:MM	SIZE:A4
	SHEET:3/3	REV:A