REV.	DESCRIPTION OF CHANGE	REVIEWED BY	ISSUE DATE
A	FIRST ISSUE	LEO	2023-02-23

NOTES:
1.MATERIAL:
CAGE: COPPER ALLOY, Ni PLATED
THICKNESS 0.25mm
2.PACKAGING: TRAY PACKAGING
3.TEMPERATURE RANGE: −55°C TO +85°C

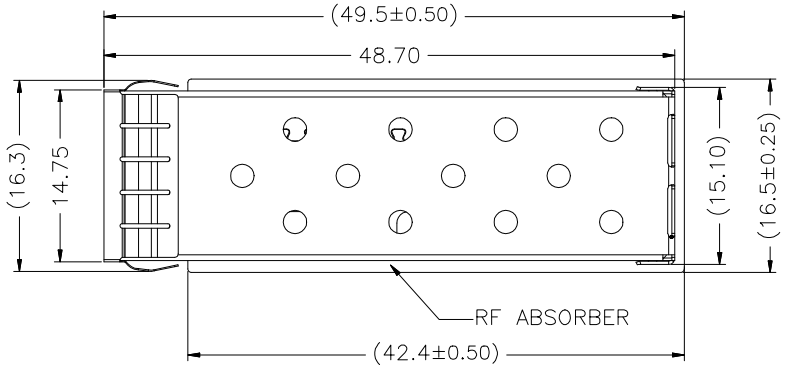

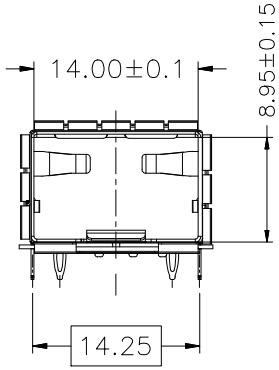

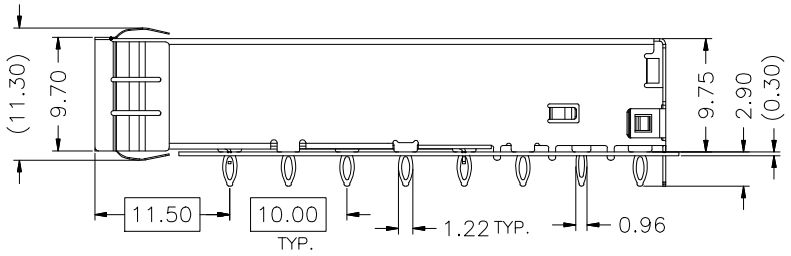

RoHS 2011/65/EU

TITLE	SFP28 1X1 CAGE WITH EMI SPRING FINGER		LINK-PP INT'L TECHNOLOGY CO., LIMITED			
PART NO.	LP11CC02000D		GENNERAL TOLERANCE		UNIT:MM	SIZE:A4
APPROVE	CHECK	DRAW	.X±0.25	.X±1°	SCALE:1:1	SHEET:1/3	REV:A
LEO	Kevin	Kevin	.XX±0.15	.XX±5°			
			.XXX±0.10				

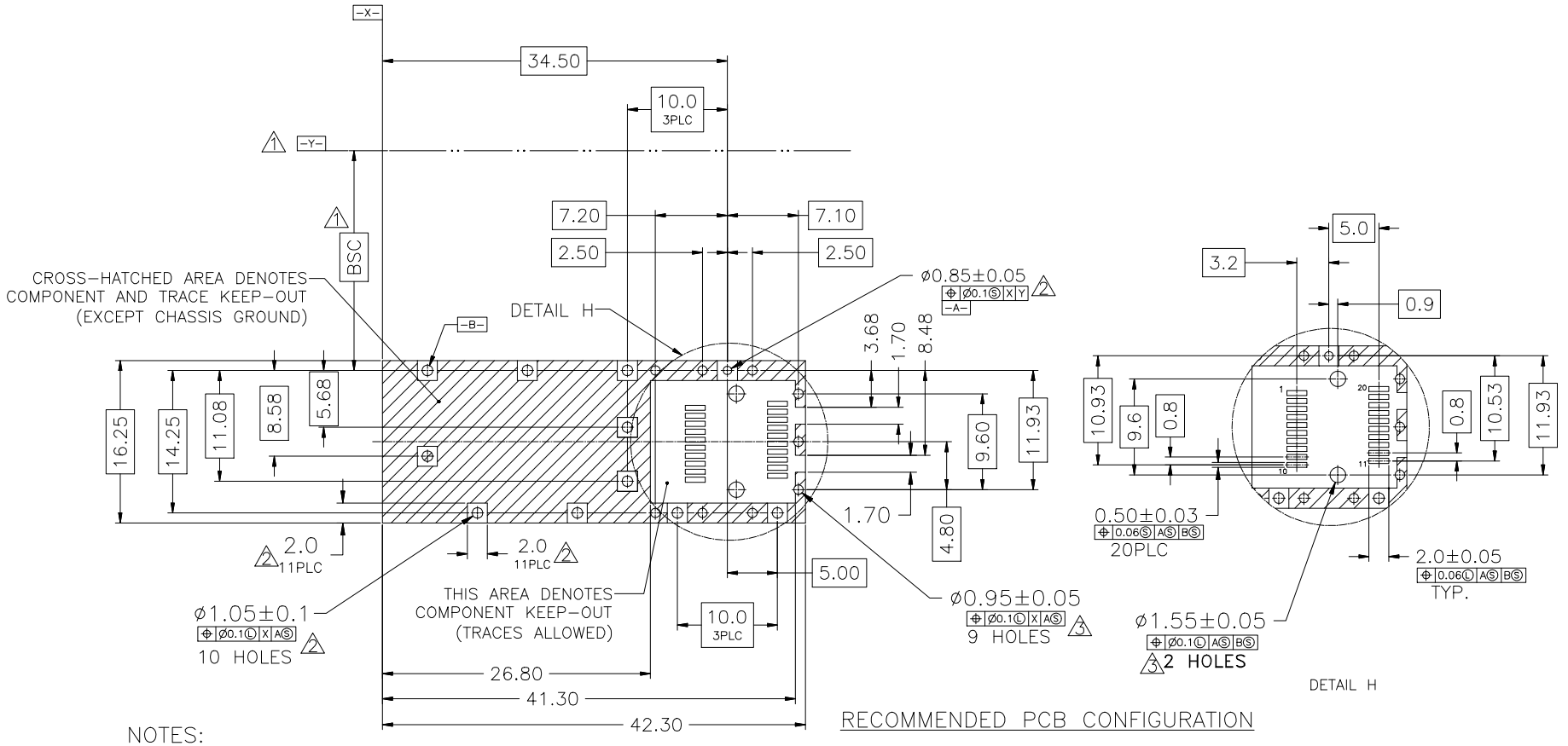

NOTES:

1. DATUM AND BASIC DIMENSIONS ESTABLISHED BY CUSTOMER
2. PADS AND VIAS ARE CHASSIS GROUND, 11 PLACES
3. THRU HOLES, PLATING OPTIONAL

RoHS 2011/65/EU

TITLE: SFP28 1X1 CAGE WITH EMI SPRING FINGER		LINK-PP INT'L TECHNOLOGY CO., LIMITED
PART NO.: LP11CC02000D	GENNERAL TOLERANCE: .X±0.25, .X±1°, .XX±0.15, .XX±5°, .XXX±0.10	UNIT:MM / SIZE:A4 / SCALE:1:1 / SHEET:2/3 / REV:A
APPROVE: LEO / CHECK: Kevin / DRAW: Kevin		

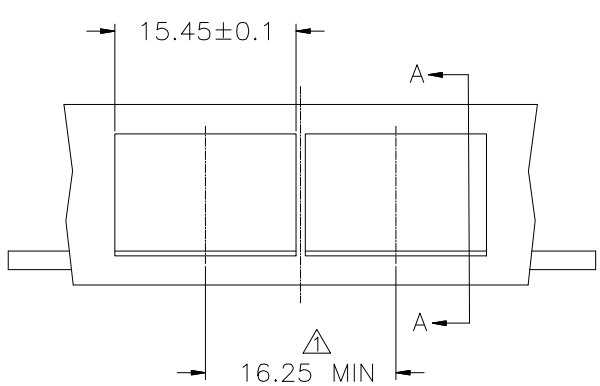

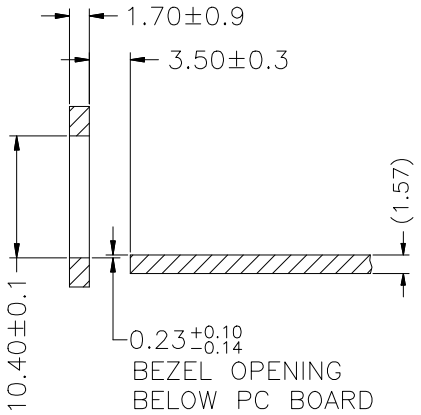

SECTION A–A

RECOMMENDED BEZEL DESIGN

NOTES:
⚠1 MINIMUM PITCH ILLUSTRATED, ENGLISH DIMENSIONS ARE FOR REFERENCE ONLY

RoHS 2011/65/EU

TITLE: SFP28 1X1 CAGE WITH EMI SPRING FINGER			LINK-PP INT'L TECHNOLOGY CO., LIMITED				
PART NO.: LP11CC02000D			GENNERAL TOLERANCE			UNIT:MM	SIZE:A4
APPROVE	CHECK	DRAW	.X±0.25	.X±1°	SCALE:1:1	SHEET:3/3	REV:A
LEO	Kevin	Kevin	.XX±0.15	.XX±5°			
			.XXX±0.10				