| REV. | DESCRIPTION OF CHANGE | REVIEWED BY | ISSUE DATE |
|---|---|---|---|
| A | FIRST ISSUE | JULY | 2023-11-28 |
| | | | |

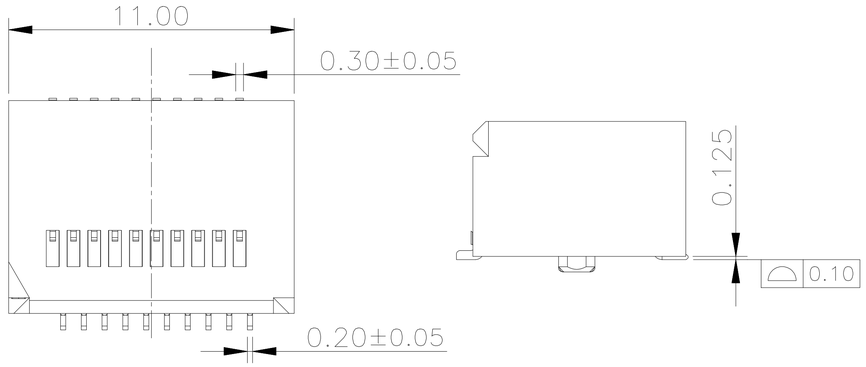


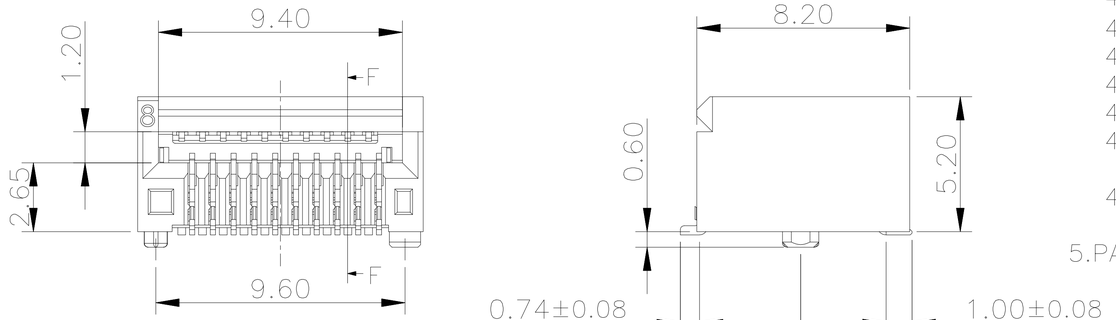


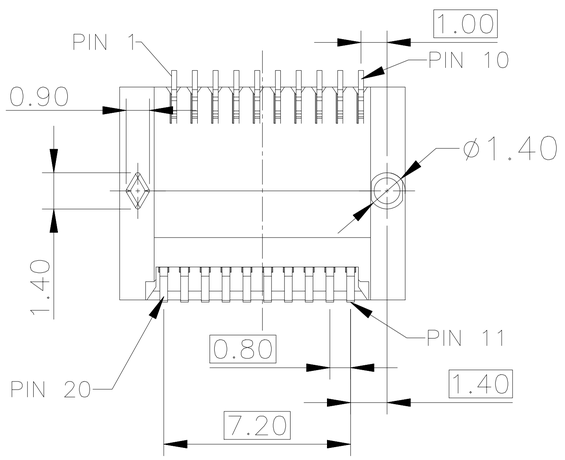


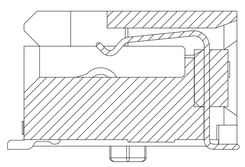

剖面 F–F

NOTES:

1.MATERIAL
HOUSING: HIGH TEMPERATURE LCP, Black, UL94 V–0.

2.CONTACTS: PHOSPHOR BRONZE
PLATING :30μ" GOLD ON MATING AREA,
GOLD FLASH PLATING ON
SOLDER TAILS, 50μ" NICKEL
UNDERPLATING OVERALL.

3. MECHANICAL REQUIREMENT:
3.1 DURABILITY:100 CYCLES NIN.
3.2 INSERTION AND EXTRACTION FORCE:40N MAX. & 11.5N MAX.

4. ENVIRONMENTAL:
4.1 CONTACT RESISTANCE:20 MILLIOHMS MAX INITIAL.
4.2 DIELECTRIC WITHSTANDING VOLTAGE: 300V AC/MIN.
4.3 CURRENT RATING: 0.5 Amps Max.
4.4 OPERATION: −40°C TO +95°C
4.5 STORAGE: −55°C TO +105°C
4.6 REFLOW SOLDERING TEMPERATURE: 255~265° MAXLIMUM FOR 5~10 SECONDS.
4.9 ROHS COMPLIANT

5.PACKAGING: TAPE AND REEL

RoHS 2011/65/EU

| | | |
|---|---|---|
| TITLE: SFP28 1X1 20P CONNECTOR | LINK-PP INT'L TECHNOLOGY CO., LIMITED | |
| PART NO.: LP11C000013 | GENNERAL TOLERANCE: .X±0.25, .X±1°; .XX±0.15, .XX±5°; .XXX±0.10 | UNIT:MM; SIZE:A4; SCALE:1:1; SHEET:1/4; REV:A |

| APPROVE | CHECK | DRAW |
|---|---|---|
| JULY | Kevin | Kevin |

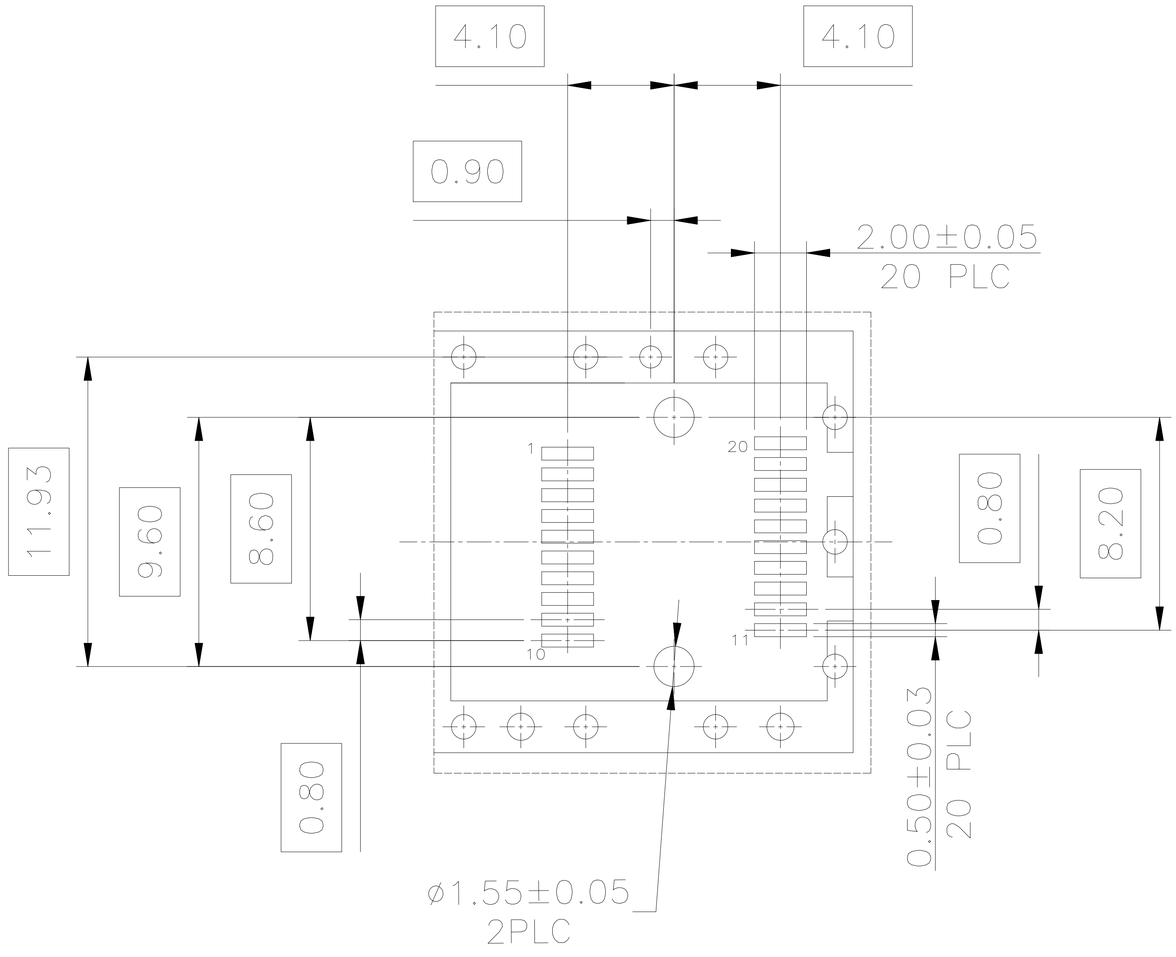


RoHS
2011/65/EU

| | | | | | | | |
|---|---|---|---|---|---|---|---|
| TITLE: SFP28 1X1 20P CONNECTOR | | | LINK-PP INT'L TECHNOLOGY CO., LIMITED | | | | |
| PART NO.: LP11C000013 | | | GENNERAL TOLERANCE | | | UNIT:MM | SIZE:A4 |
| APPROVE | CHECK | DRAW | .X±0.25 | .X±1° | SCALE:1:1 | SHEET:2/4 | REV:A |
| JULY | Kevin | Kevin | .XX±0.15 | .XX±5° | | | |
| | | | .XXX±0.10 | | | | |

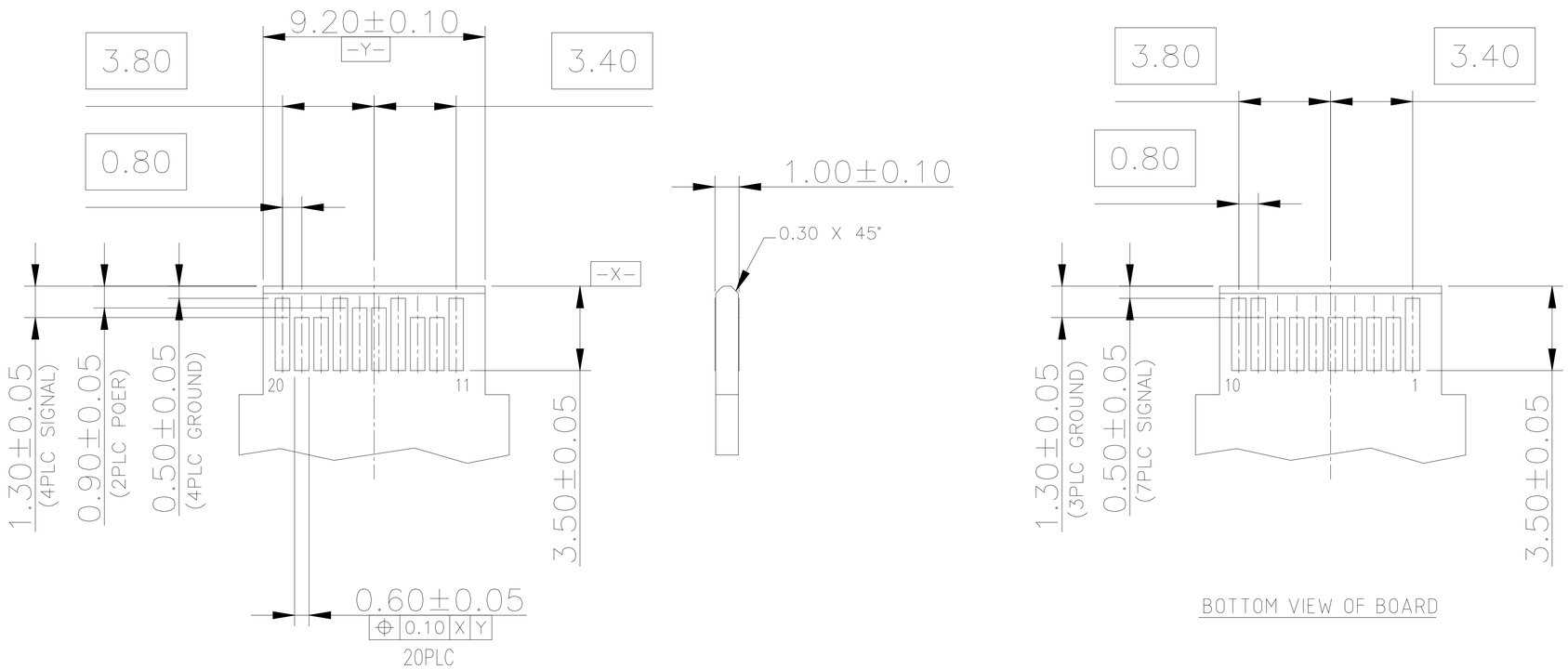


TOP VIEW OF BOARD

BOTTOM VIEW OF BOARD

# RECOMMENDED LAYOUT DETAIL MATING TRANSCEIVER PCB

RoHS 2011/65/EU

| | | | | | | | |
|---|---|---|---|---|---|---|---|
| TITLE: SFP28 1X1 20P CONNECTOR | | | LINK-PP INT'L TECHNOLOGY CO., LIMITED | | | | |
| PART NO.: LP11C000013 | | | GENNERAL TOLERANCE | | | UNIT:MM | SIZE:A4 |
| APPROVE | CHECK | DRAW | .X±0.25 | .X±1° | SCALE:1:1 | SHEET:3/4 | REV:A |
| JULY | Kevin | Kevin | .XX±0.15 | .XX±5° | | | |
| | | | .XXX±0.10 | | | | |

# PACKAGE INFORMATION AND LABLE

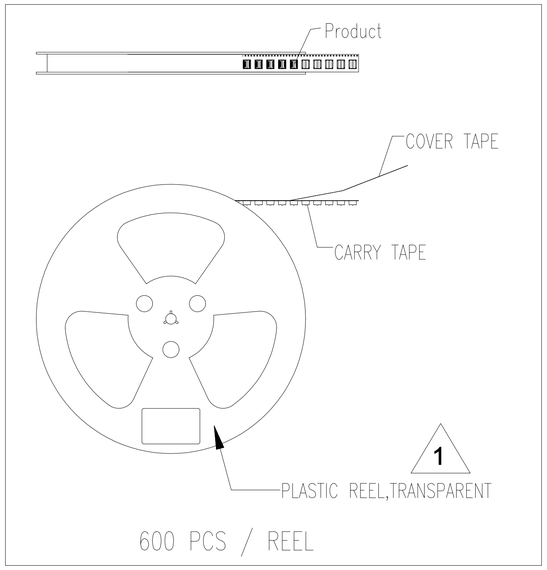


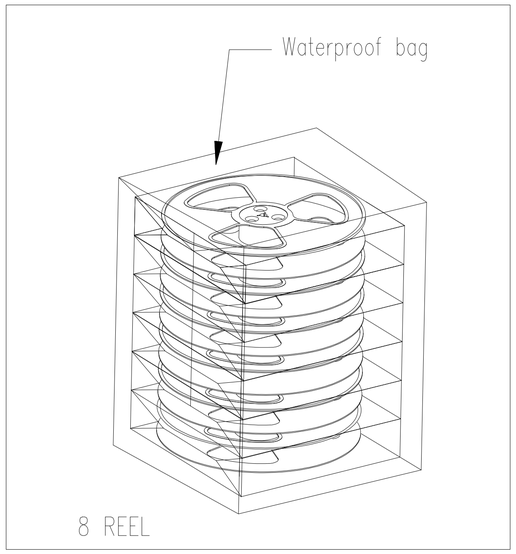


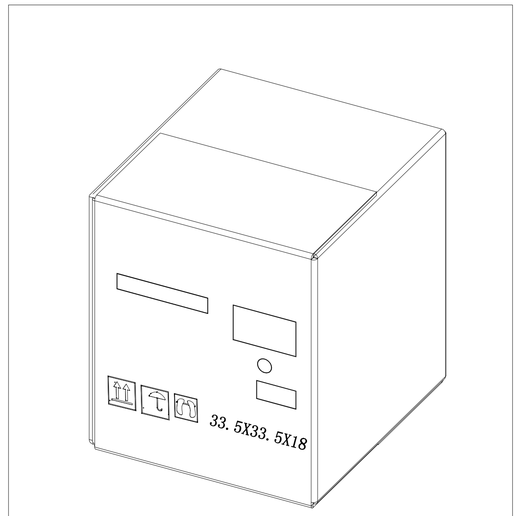


PACKING QUANTITY : 600 PCS FINISHED GOODS PER REEL.

8 REEL (4800 PCS FINISHED GOODS) PER CARTON BOX.

RoHS 2011/65/EU

| | | | | | | | |
|---|---|---|---|---|---|---|---|
| TITLE: SFP28 1X1 20P CONNECTOR | | | LINK-PP INT'L TECHNOLOGY CO., LIMITED | | | | |
| PART NO.: LP11C000013 | | | GENNERAL TOLERANCE | | | UNIT:MM | SIZE:A4 |
| APPROVE | CHECK | DRAW | .X±0.25 | .X±1° | SCALE:1:1 | SHEET:4/4 | REV:A |
| JULY | Kevin | Kevin | .XX±0.15 | .XX±5° | | | |
| | | | .XXX±0.10 | | | | |