REV.	DESCRIPTION OF CHANGE	REVIEWED BY	ISSUE DATE
A	FIRST ISSUE	XUAN	2021-09-02

NOTES:
1.MATERIAL:
CAGE: STAINLESS STEEL, Ni PLATED
THICKNESS 0.25mm
LIGHT PIPE: CLEAR POLYCARBONATE
2.PACKAGING: TRAY PACKAGING
3.TEMPERATURE RANGE: −55°C TO +85°C

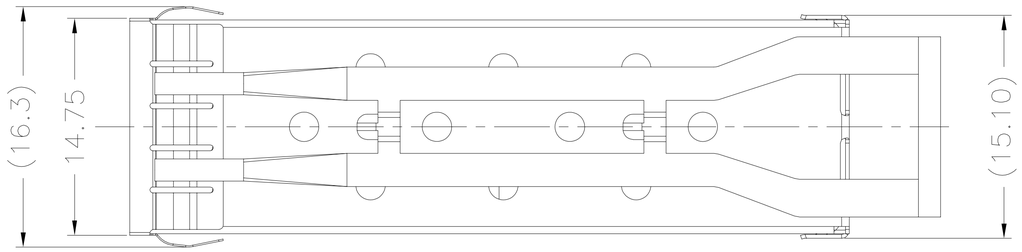

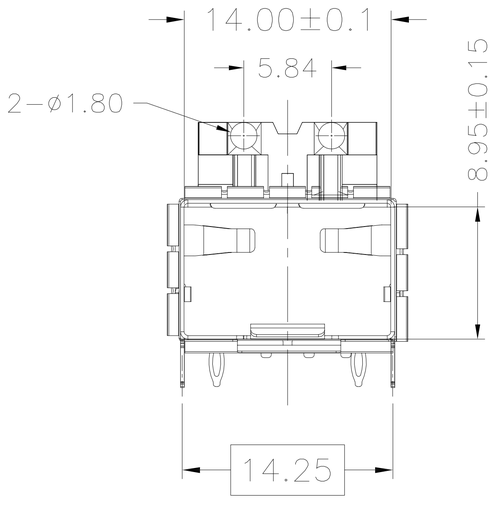

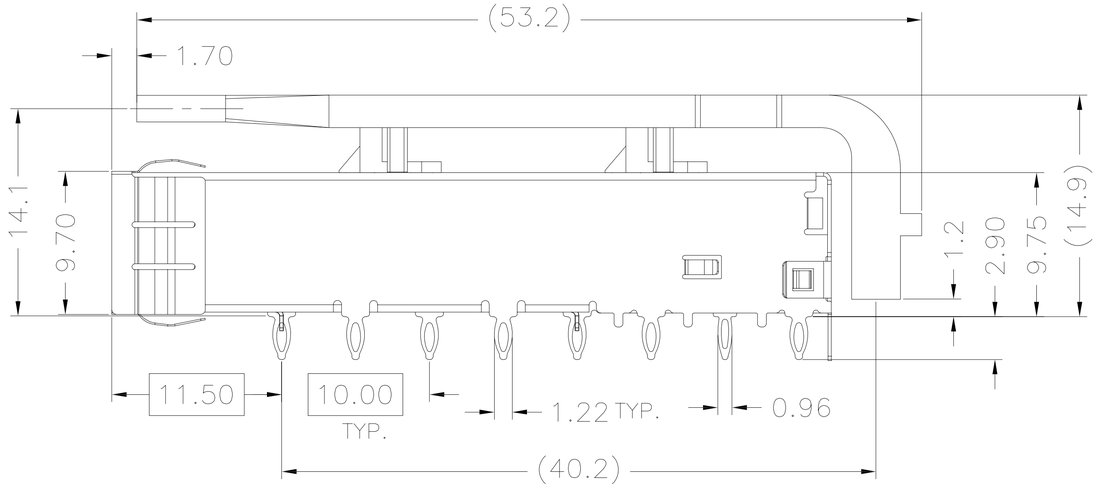

RoHS
2011/65/EU

TITLE			LINK-PP INT'L TECHNOLOGY CO., LIMITED				
SFP+ 1X1 CAGE WITH EMI SPRING FINHER LIGHT PIPE							
PART NO. LP11BC02300Y			GENNERAL TOLERANCE			UNIT:MM	SIZE:A4
APPROVE	CHECK	DRAW	.X±0.25	.X±1°	SCALE:1:1	SHEET:1/3	REV:A
XUAN	Kevin	Kevin	.XX±0.15	.XX±5°			
			.XXX±0.10				

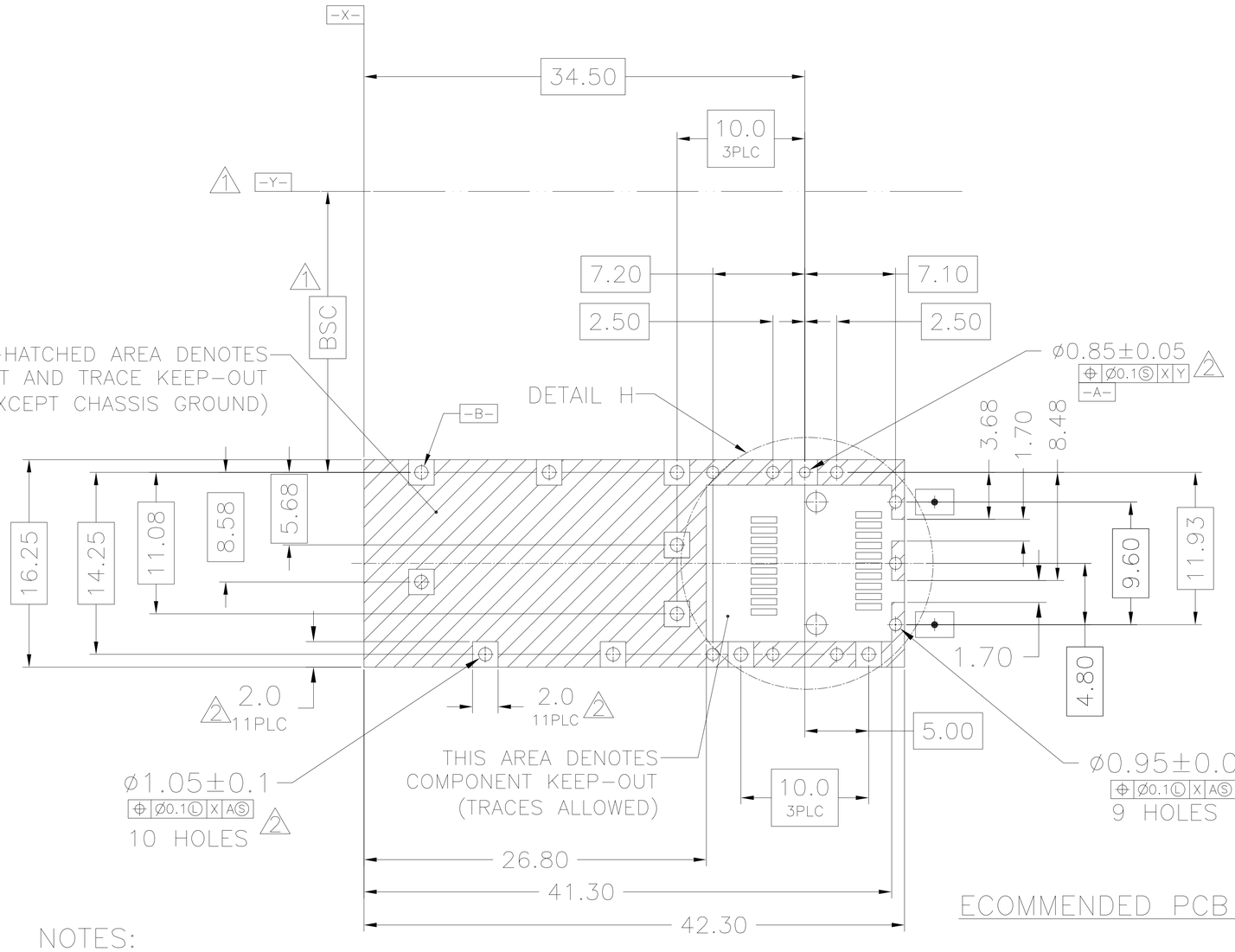

ECOMMENDED PCB CONFIGURATION

NOTES:

1. DATUM AND BASIC DIMENSIONS ESTABLISHED BY CUSTOMER
2. PADS AND VIAS ARE CHASSIS GROUND, 11 PLACES
3. THRU HOLES, PLATING OPTIONAL

RoHS 2011/65/EU

TITLE: SFP+ 1X1 CAGE WITH EMI SPRING FINHER LIGHT PIPE			LINK-PP INT'L TECHNOLOGY CO., LIMITED				
PART NO.: LP11BC02300Y			GENNERAL TOLERANCE			UNIT:MM	SIZE:A4
APPROVE	CHECK	DRAW	.X±0.25	.X±1°	SCALE:1:1	SHEET:2/3	REV:A
XUAN	Kevin	Kevin	.XX±0.15	.XX±5°			
			.XXX±0.10				

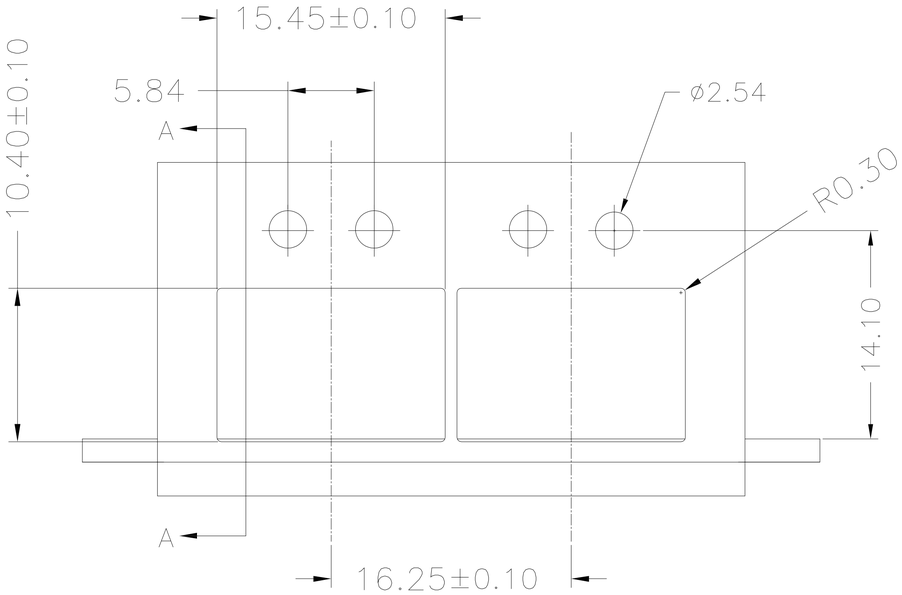

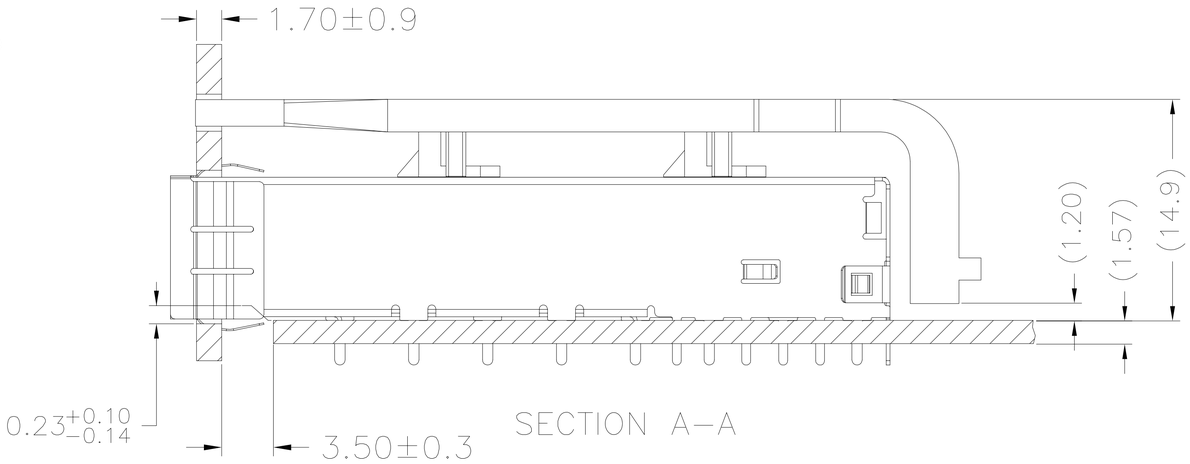

RECOMMENDED BEZEL DESIGN

NOTES:

1. MINIMUM PITCH ILLUSTRATED, ENGLISH DIMENSIONS ARE FOR REFERENCE ONLY

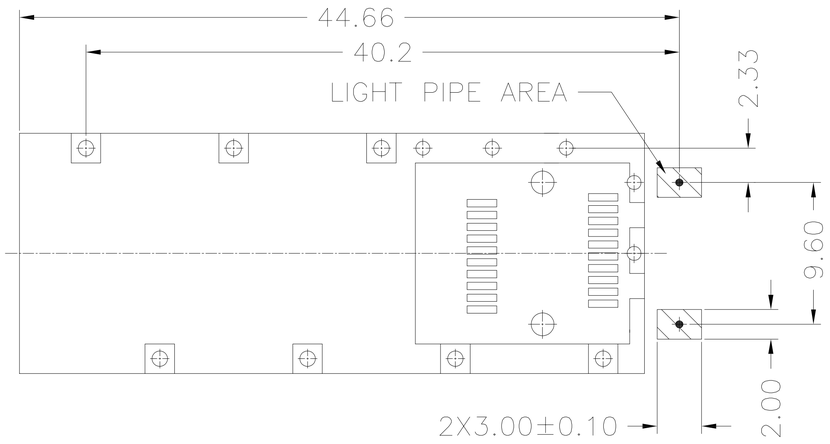

ECOMMENDED PCB CONFIGURATION

RoHS 2011/65/EU

TITLE: SFP+ 1X1 CAGE WITH EMI SPRING FINHER LIGHT PIPE			LINK-PP INT'L TECHNOLOGY CO., LIMITED				
PART NO.: LP11BC02300Y			GENNERAL TOLERANCE			UNIT:MM	SIZE:A4
APPROVE	CHECK	DRAW	.X±0.25	.X±1°	SCALE:1:1	SHEET:3/3	REV:A
XUAN	Kevin	Kevin	.XX±0.15	.XX±5°			
			.XXX±0.10				