REV	DESCRIPTION OF CHANGE	REVIEWED BY	ISSUE DATE
A	The crescent foot is straight	LEO	2021-09-02
B	The crescent foot is curved	LEO	2021-10-12

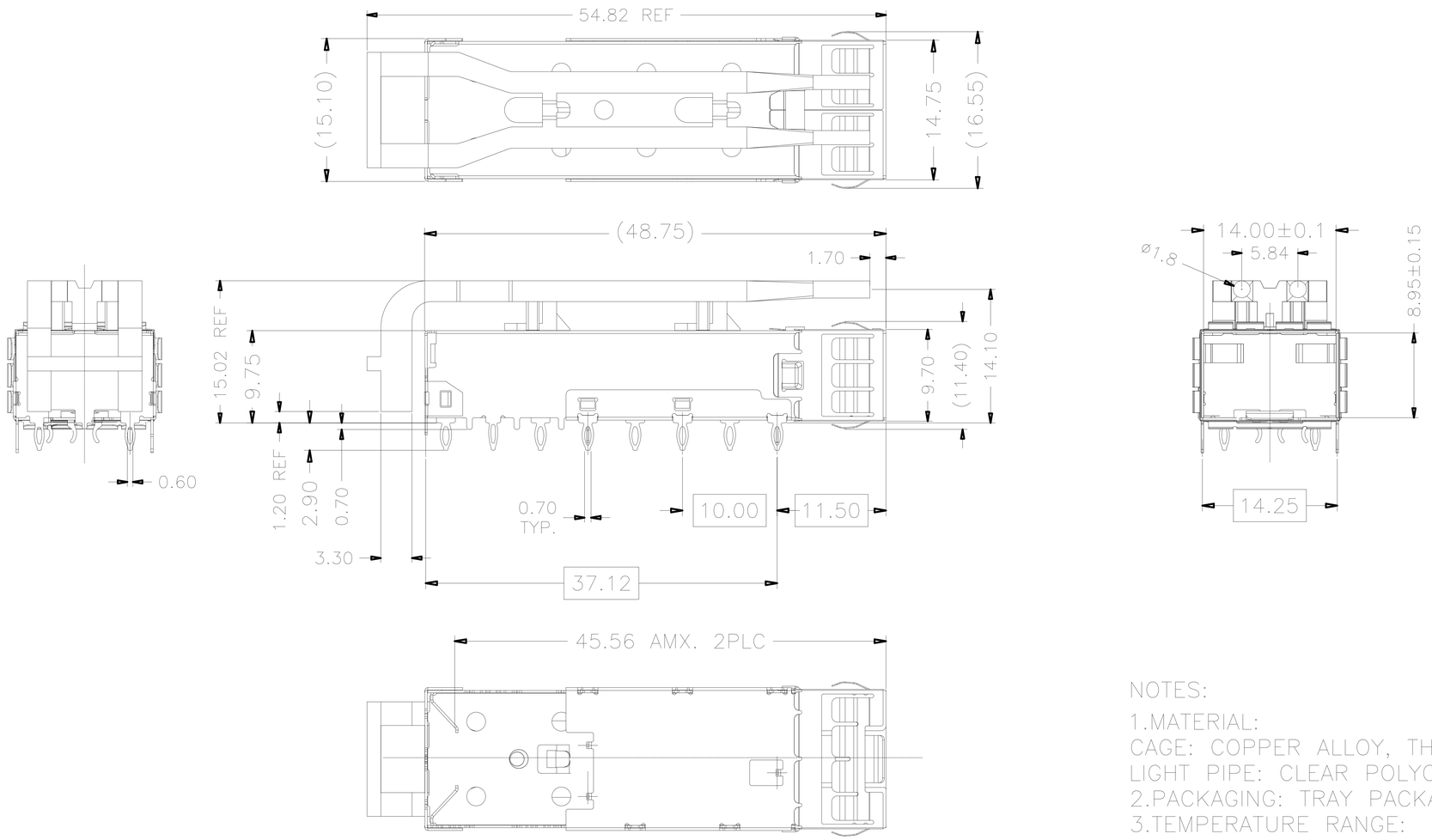

NOTES:

1.MATERIAL:
CAGE: COPPER ALLOY, THICKNESS 0.25mm
LIGHT PIPE: CLEAR POLYCARBONATE
2.PACKAGING: TRAY PACKAGING
3.TEMPERATURE RANGE:
OPERATING : −40°C TO +85°C
NON OPERATING : −55°C TO +105°C

RoHS
2011/65/EU

TITLE: SFP+ 1X1 CAGE WITH EMI SPRING FINHER LIGHT PIPE				LINK-PP INT'L TECHNOLOGY CO., LIMITED			
PART NO.: LP11BC02300				GENNERAL TOLERANCE		UNIT:MM	SIZE:A4
APPROVE	CHECK	DRAW		◦ X±0.20	◦ X±1°	SCALE:1:1	SHEET:1/4	REV:B
LEO	JAMES	JAMES		◦ XX±0.15	◦ XX±5°			
				◦ XXX±0.10			

REV	DESCRIPTION OF CHANGE	REVIEWED BY	ISSUE DATE
A	The crescent foot is straight	LEO	2021-09-02
B	The crescent foot is curved	LEO	2021-10-12

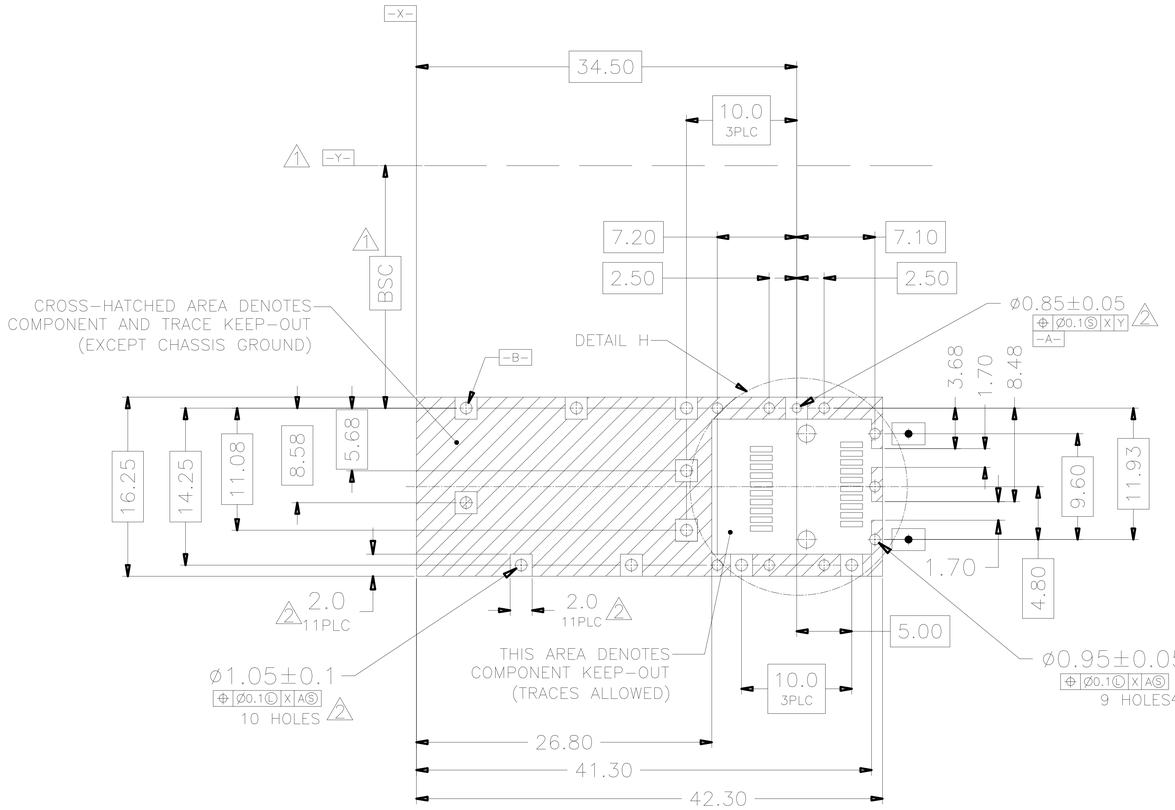

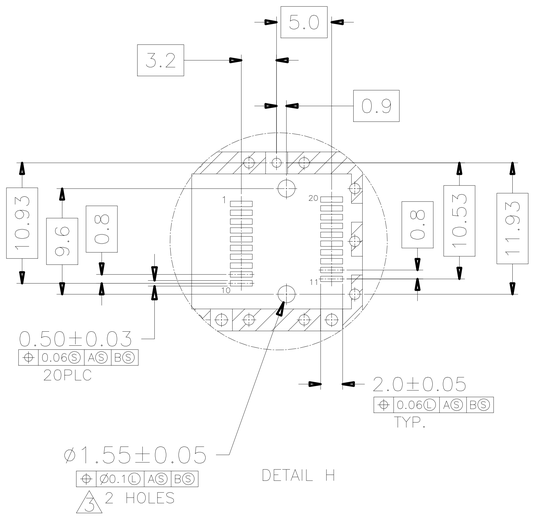

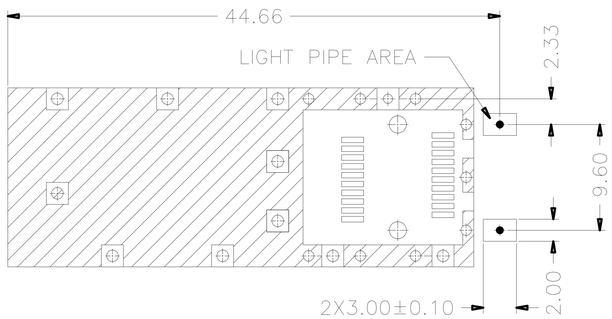

RECOMMENDED PCB CONFIGURATION

NOTES:

1. DATUM AND BASIC DIMENSIONS ESTABLISHED BY CUSTOMER
2. PADS AND VIAS ARE CHASSIS GROUND, 11 PLACES
3. THRU HOLES, PLATING OPTIONAL

RoHS 2011/65/EU

TITLE: SFP+ 1X1 CAGE WITH EMI SPRING FINHER LIGHT PIPE				LINK-PP INT'L TECHNOLOGY CO., LIMITED			
PART NO.: LP11BC02300				GENNERAL TOLERANCE		UNIT:MM	SIZE:A4
APPROVE	CHECK	DRAW		◦ X±0.20	◦ X±1°	SCALE:1:1	SHEET:1/4	REV:B
LEO	JAMES	JAMES		◦ XX±0.15	◦ XX±5°			
				◦ XXX±0.10			

REV	DESCRIPTION OF CHANGE	REVIEWED BY	ISSUE DATE
A	The crescent foot is straight	LEO	2021-09-02
B	The crescent foot is curved	LEO	2021-10-12

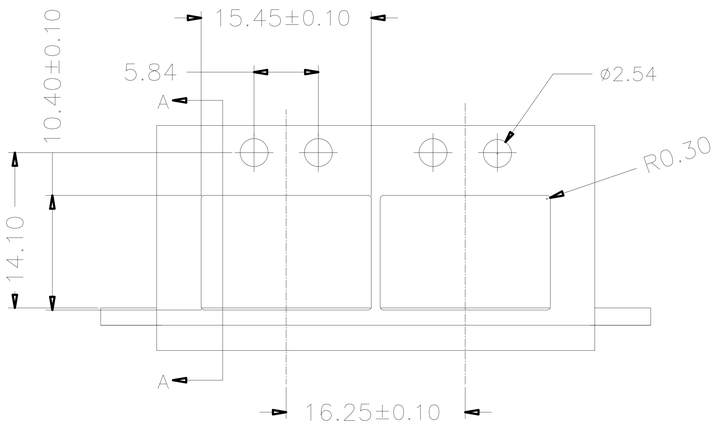

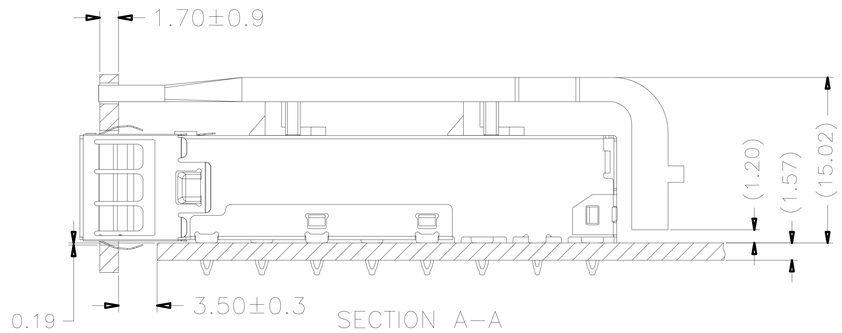

RECOMMENDED BEZEL DESIGN

RoHS
2011/65/EU

TITLE: SFP+ 1X1 CAGE WITH EMI SPRING FINHER LIGHT PIPE				LINK-PP INT'L TECHNOLOGY CO., LIMITED			
PART NO. LP11BC02300				GENNERAL TOLERANCE		UNIT:MM	SIZE:A4
APPROVE	CHECK	DRAW		◦ X±0.20	◦ X±1°	SCALE:1:1	SHEET:1/4	REV:B
LEO	JAMES	JAMES		◦ XX±0.15	◦ XX±5°			
				◦ XXX±0.10				

PACKAGE INFORMATION AND LABLE

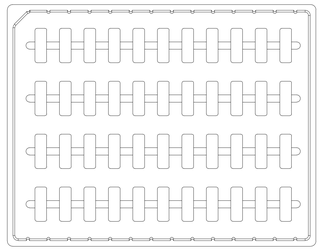

1. PRODUCTS IN TRAYS

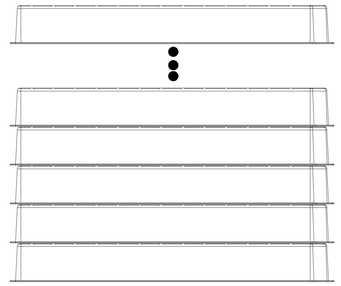

2. TRAYS OVERLAY:
(THE NEXT TRAY NEED ROTATE 180 DEGREE AND PUT IT ON PREVIOUS TRAY.)
（相邻两个吸塑间水平方向成180度摆放）

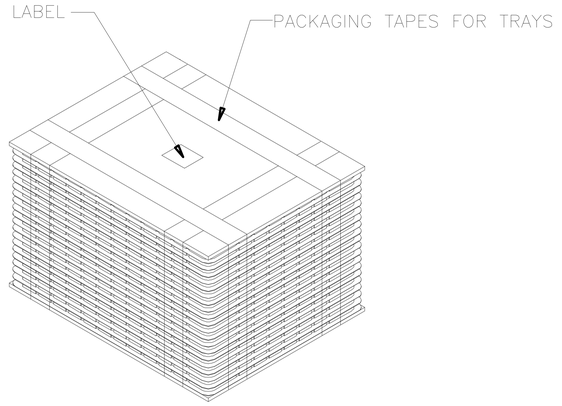

3. LABEL & PACKAGING TAPES FOR TRAYS:

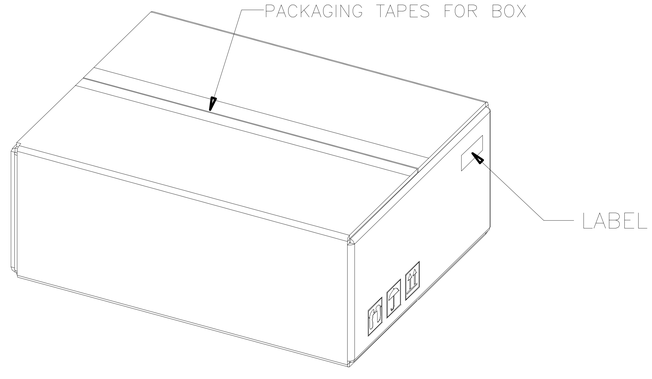

4. LABEL & PACKAGING TAPES FOR BOX

PACKAGING LISTS	
ITEM	Q'TY
PRODUCT	220 PCS
TRAY	5 PCS
BOX(L340*W265*H200MM)	1 PCS
LABLE	2 PCS
PACKAGING TAPES	8 M (ABOUT)

RoHS 2011/65/EU

TITLE	SFP+ 1X1 CAGE WITH EMI SPRING FINHER LIGHT PIPE			LINK-PP INT'L TECHNOLOGY CO., LIMITED			
PART NO.	LP11BC02300			GENNERAL TOLERANCE		UNIT:MM	SIZE:A4
APPROVE	CHECK	DRAW		◦ X±0.20	◦ X±1°	SCALE:1:1	SHEET:1/4	REV:B
LEO	JAMES	JAMES		◦ XX±0.15	◦ XX±5°			
				◦ XXX±0.10			