REV.	DESCRIPTION OF CHANGE	REVIEWED BY	ISSUE DATE
A	FIRST ISSUE	XUAN	2025-04-01

NOTES:
1.MATERIAL:
  CAGE: COPPER ALLOY, Ni PLATED
        THICKNESS 0.25mm
  HEAT SINK : ALUMINUM(SURFACE TREATMENT:
              BLACK OXIDE)
  CLIP: STAINLESS STEEL
2.PACKAGING: TRAY PACKAGING
3.TEMPERATURE RANGE: −55°C TO +85°C

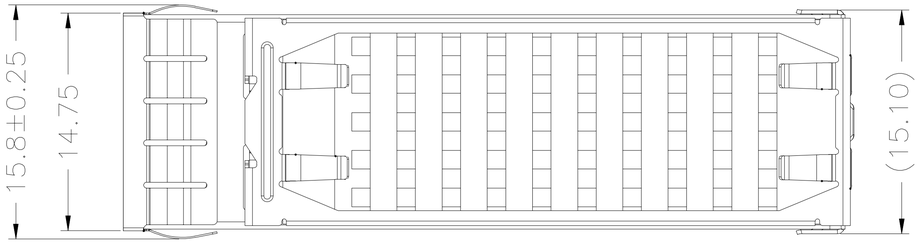

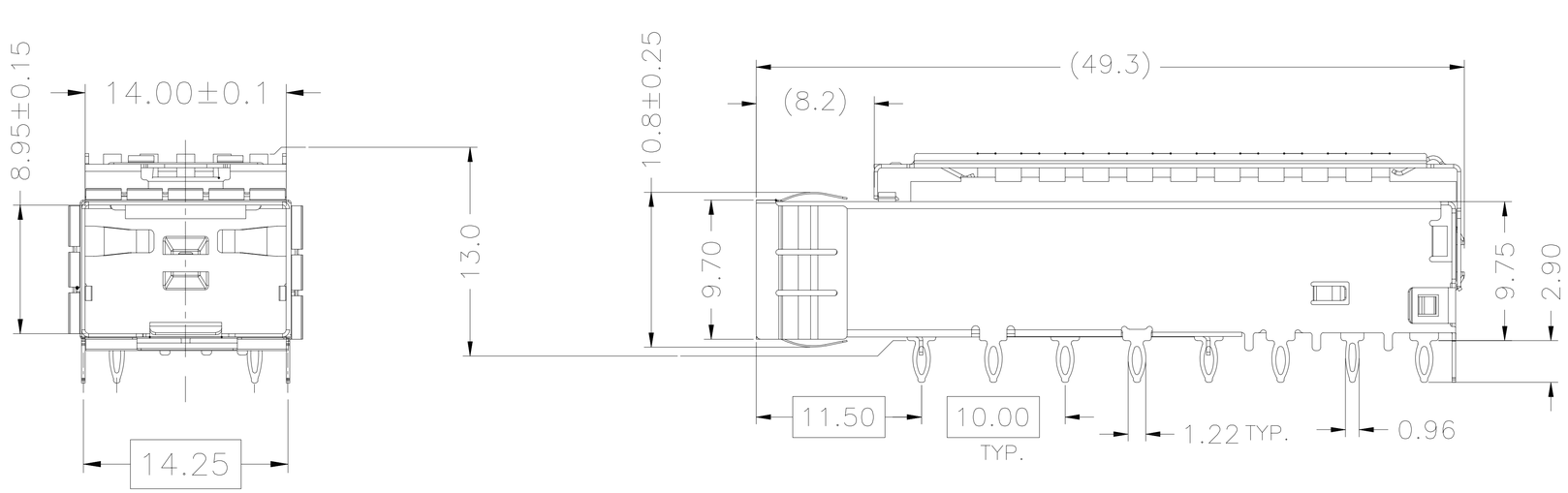

RoHS 2011/65/EU

TITLE	SFP+ 1X1 CAGE WITH EMI SPRING FINGER HEAT SINK			LINK-PP INT'L TECHNOLOGY CO., LIMITED				
PART NO.	LP11BC020P0			GENNERAL TOLERANCE			UNIT:MM	SIZE:A4
APPROVE	CHECK	DRAW	.X±0.25	.X±1°	SCALE:1:1		SHEET:1/3	REV:A
XUAN	Kevin	Kevin	.XX±0.15	.XX±5°				
			.XXX±0.10					

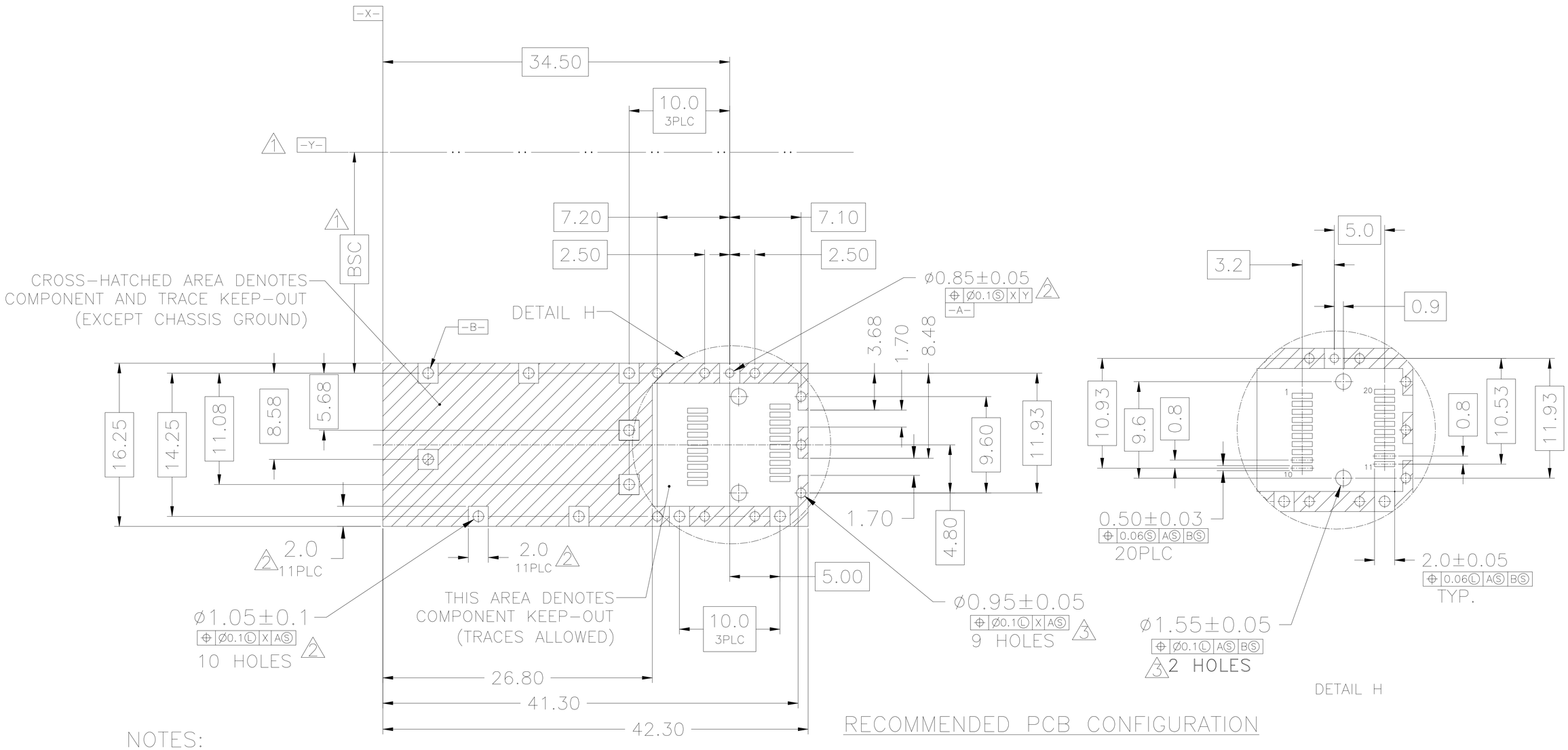

RECOMMENDED PCB CONFIGURATION

NOTES:

1. DATUM AND BASIC DIMENSIONS ESTABLISHED BY CUSTOMER
2. PADS AND VIAS ARE CHASSIS GROUND, 11 PLACES
3. THRU HOLES, PLATING OPTIONAL

RoHS 2011/65/EU

TITLE: SFP+ 1X1 CAGE WITH EMI SPRING FINGER HEAT SINK			LINK-PP INT'L TECHNOLOGY CO., LIMITED			
PART NO.: LP11BC020P0			GENNERAL TOLERANCE		UNIT:MM	SIZE:A4
APPROVE	CHECK	DRAW	.X±0.25	.X±1°	SCALE:1:1	SHEET:2/3	REV:A
XUAN	Kevin	Kevin	.XX±0.15	.XX±5°		
			.XXX±0.10			

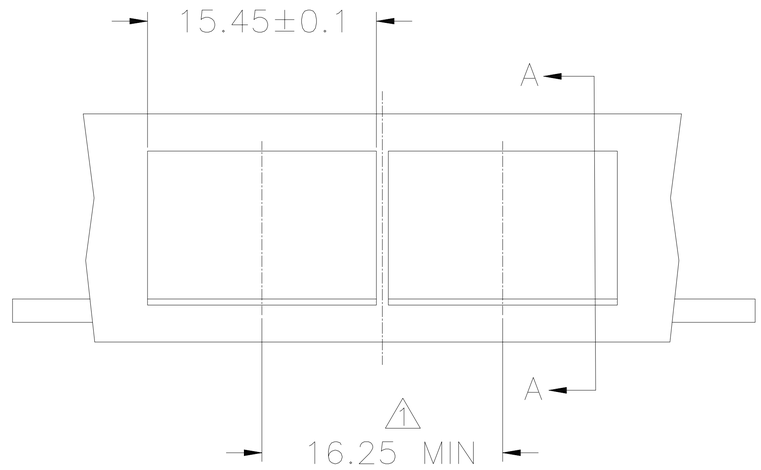

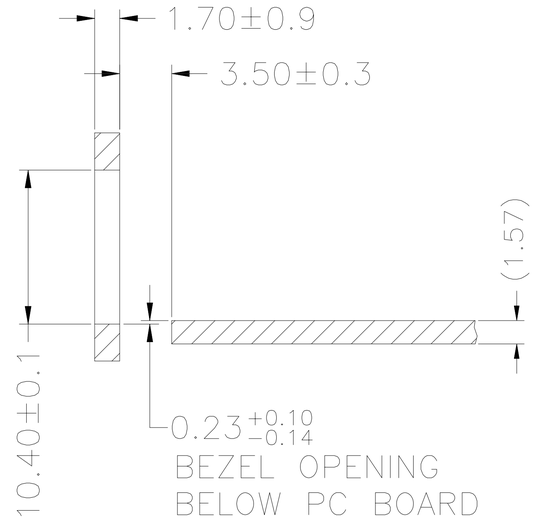

SECTION A–A

RECOMMENDED BEZEL DESIGN

NOTES:
1. MINIMUM PITCH ILLUSTRATED, ENGLISH DIMENSIONS ARE FOR REFERENCE ONLY

RoHS 2011/65/EU

TITLE: SFP+ 1X1 CAGE WITH EMI SPRING FINGER HEAT SINK			LINK-PP INT'L TECHNOLOGY CO., LIMITED				
PART NO.: LP11BC020P0			GENNERAL TOLERANCE			UNIT:MM	SIZE:A4
APPROVE	CHECK	DRAW	.X±0.25	.X±1°	SCALE:1:1	SHEET:3/3	REV:A
XUAN	Kevin	Kevin	.XX±0.15	.XX±5°			
			.XXX±0.10				