REV	DESCRIPTION OF CHANGE	REVIEWED BY	ISSUE DATE
A	FIRST ISSUE	LEO	2021-09-02

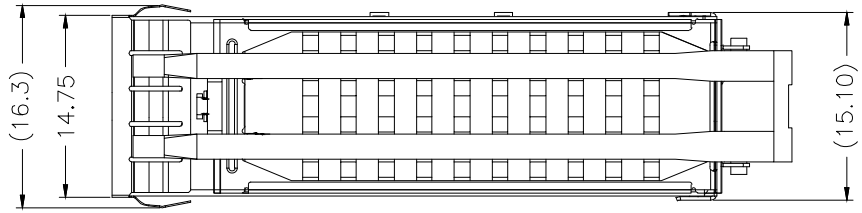

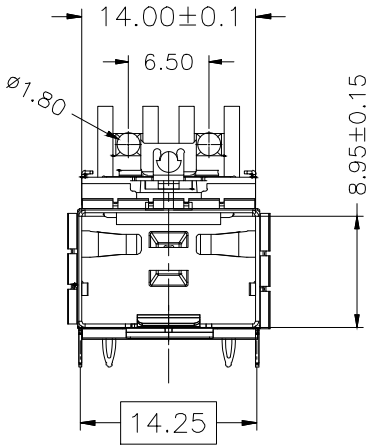

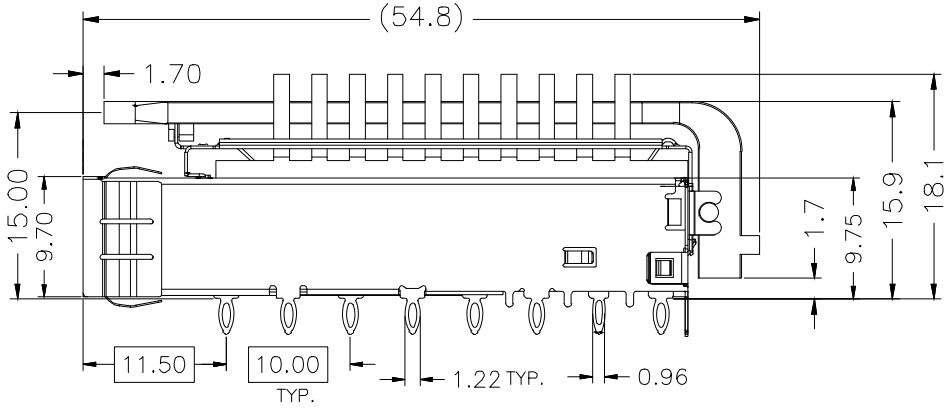

NOTES:
1.MATERIAL:
CAGE: COPPER ALLOY, Ni PLATED
THICKNESS 0.25mm
LIGHT PIPE: CLEAR POLYCARBONATE
HEAT SINK : ALUMINUM(SURFACE TREATMENT: BLACK OXIDE)
CLIP: STAINLESS STEEL
2.PACKAGING: TRAY PACKAGING
3.TEMPERATURE RANGE: −55°C TO +85°C

RoHS 2011/65/EU

TITLE: SFP+ 1X1 CAGE WITH EMI SPRING FINGER LIGHT PIPE HEAT SINK	LINK-PP INT'L TECHNOLOGY CO., LIMITED	
PART NO.: LP11BC01680	GENNERAL TOLERANCE	UNIT:MM / SIZE:A4
APPROVE: LEO / CHECK: JAMES / DRAW: JAMES	◦ X±0.20, ◦ X±1°, ◦ XX±0.15, ◦ XX±5°, ◦ XXX±0.10	SCALE:1:1 / SHEET:1/3 / REV:A

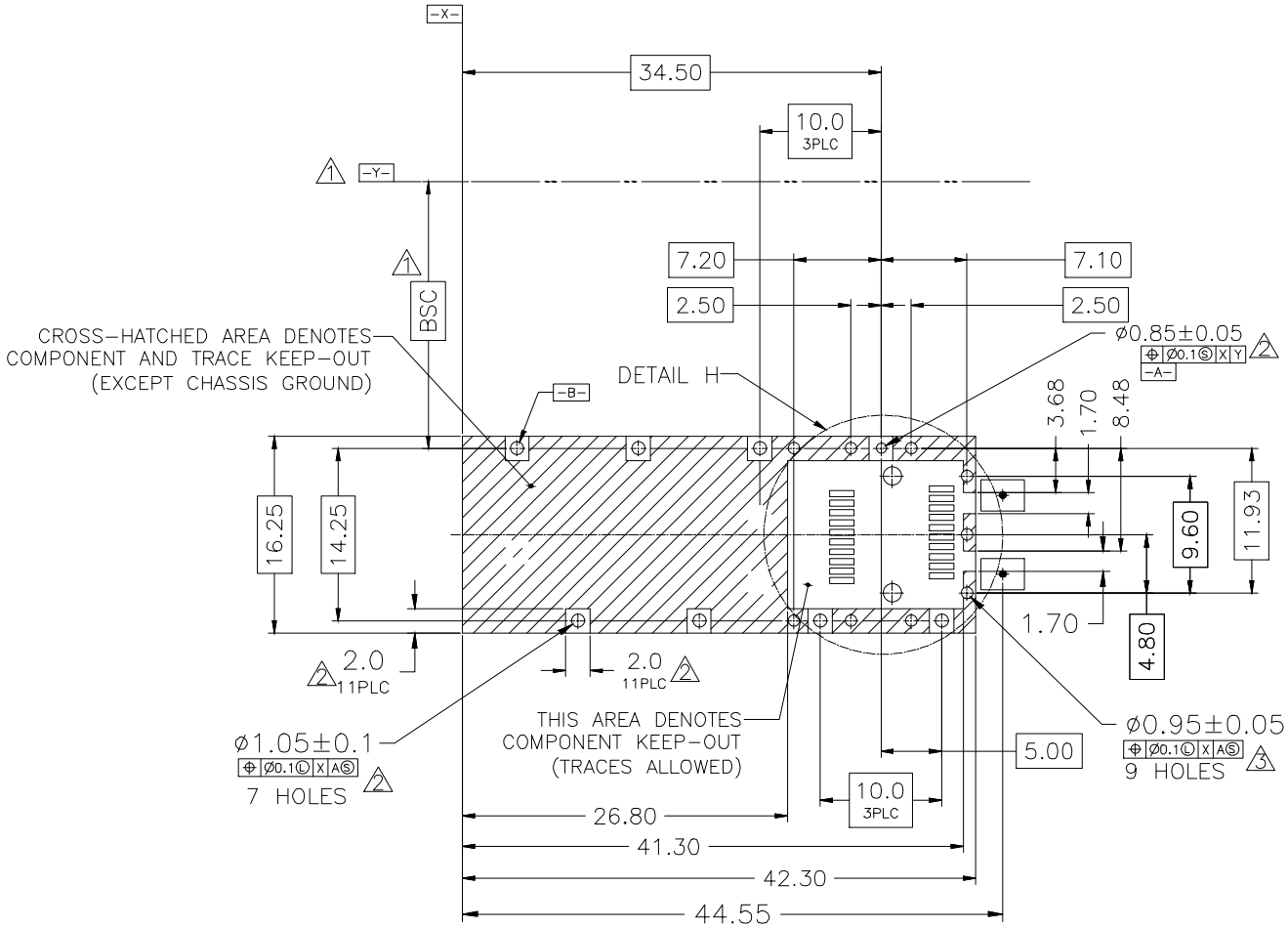

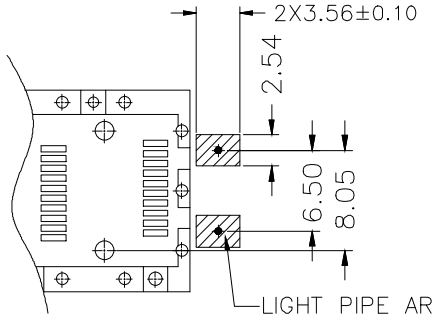

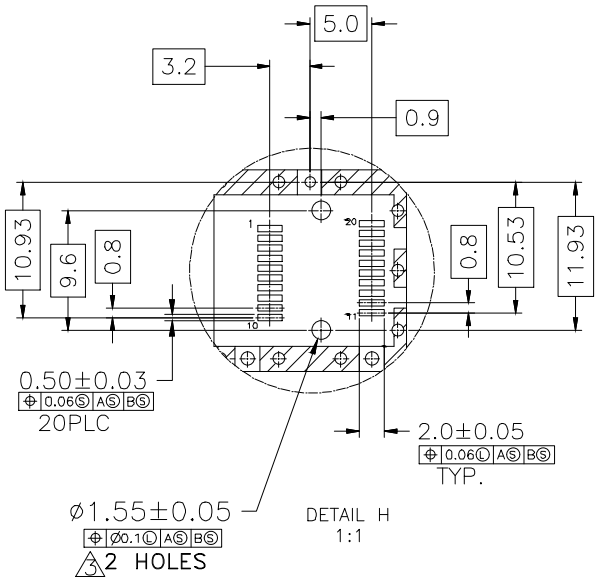

ECOMMENDED PCB CONFIGURATION

NOTES:

1. DATUM AND BASIC DIMENSIONS ESTABLISHED BY CUSTOMER
2. PADS AND VIAS ARE CHASSIS GROUND, 11 PLACES
3. THRU HOLES, PLATING OPTIONAL

RoHS 2011/65/EU

TITLE: SFP+ 1X1 CAGE WITH EMI SPRING FINGER LIGHT PIPE HEAT SINK			LINK-PP INT'L TECHNOLOGY CO., LIMITED			
PART NO.: LP11BC01680			GENNERAL TOLERANCE		UNIT:MM	SIZE:A4
APPROVE	CHECK	DRAW	◦ X±0.20	◦ X±1°	SCALE:1:1	SHEET:2/3 REV:A
LEO	JAMES	JAMES	◦ XX±0.15	◦ XX±5°		
			◦ XXX±0.10			

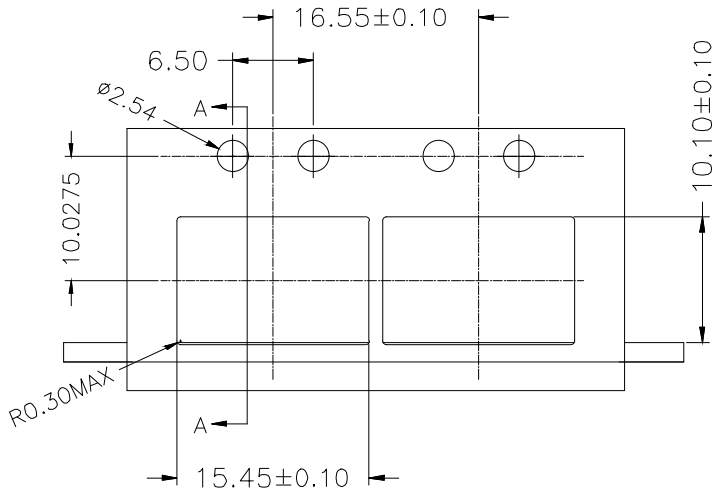

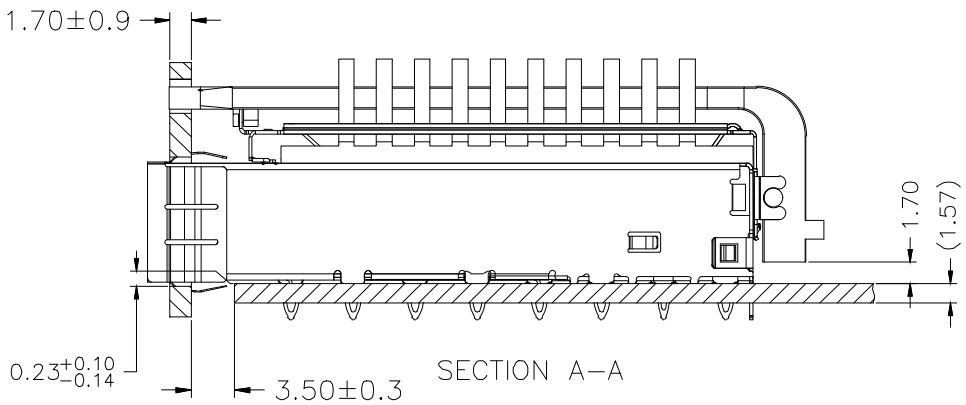

RECOMMENDED BEZEL DESIGN

NOTES:

1. MINIMUM PITCH ILLUSTRATED, ENGLISH DIMENSIONS ARE FOR REFERENCE ONLY

RoHS 2011/65/EU

TITLE: SFP+ 1X1 CAGE WITH EMI SPRING FINGER LIGHT PIPE HEAT SINK			LINK-PP INT'L TECHNOLOGY CO., LIMITED				
PART NO.: LP11BC01680			GENNERAL TOLERANCE			UNIT:MM	SIZE:A4
APPROVE	CHECK	DRAW	◦ X±0.20	◦ X±1°	SCALE:1:1	SHEET:3/3	REV:A
LEO	JAMES	JAMES	◦ XX±0.15	◦ XX±5°			
			◦ XXX±0.10				