REV	DESCRIPTION OF CHANGE	REVIEWED BY	ISSUE DATE
A	FIRST ISSUE	LEO	2023-02-20

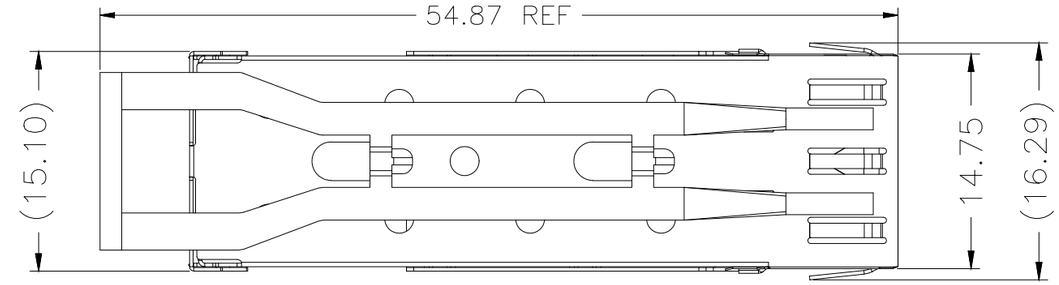

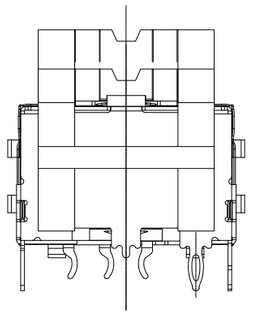

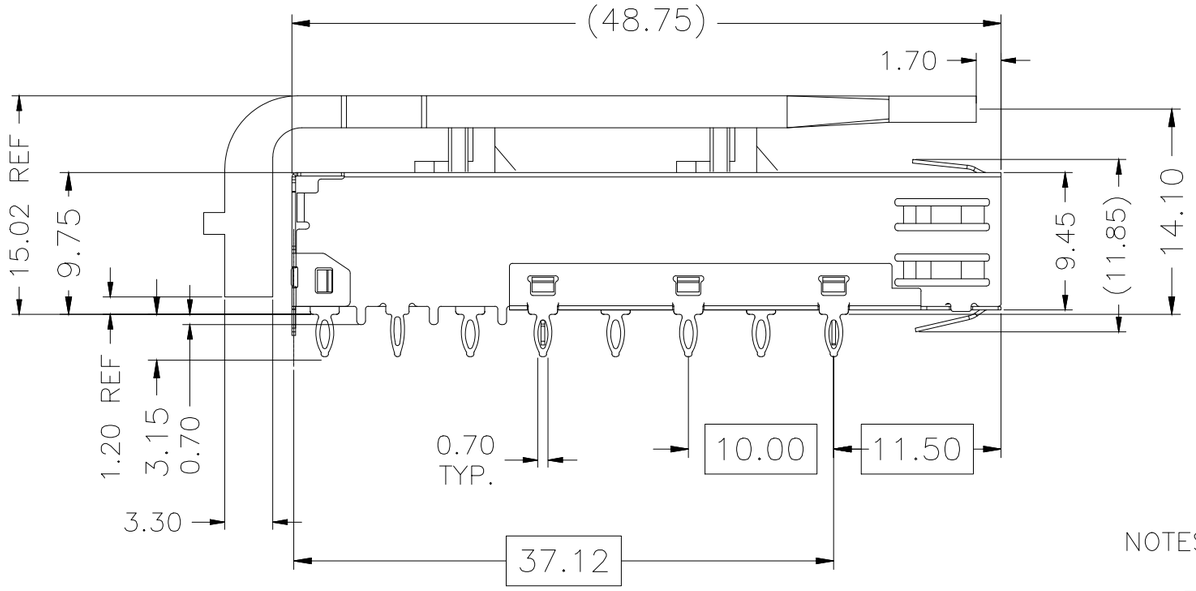

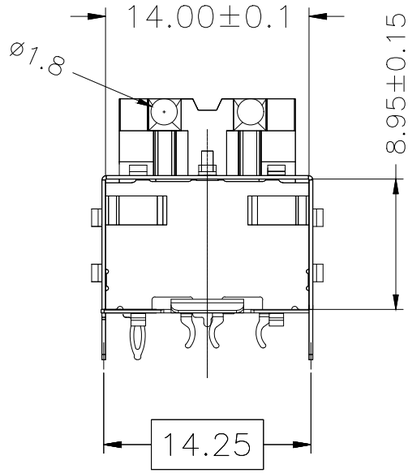

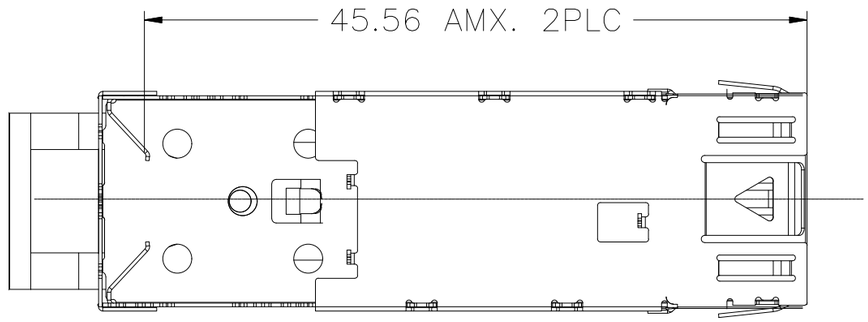

NOTES:

1.MATERIAL:
CAGE: STAINLESS STEEL, THICKNESS 0.25mm
LIGHT PIPE: CLEAR POLYCARBONATE
2.PACKAGING: TRAY PACKAGING
3.TEMPERATURE RANGE:
OPERATING : −40°C TO +85°C
NON OPERATING : −55°C TO +105°C

RoHS 2011/65/EU

TITLE: SFP 1X1 CAGE WITH EMI SPRING FINGER LIGHT PIPE			LINK-PP INT'L TECHNOLOGY CO., LIMITED				
PART NO.: LP11AC02300A			GENNERAL TOLERANCE			UNIT:MM	SIZE:A4
APPROVE	CHECK	DRAW	◦ X±0.20	◦ X±1°	SCALE:1:1	SHEET:1/3	REV:A
LEO	JAMES	JAMES	◦ XX±0.15	◦ XX±5°			
			◦ XXX±0.10				

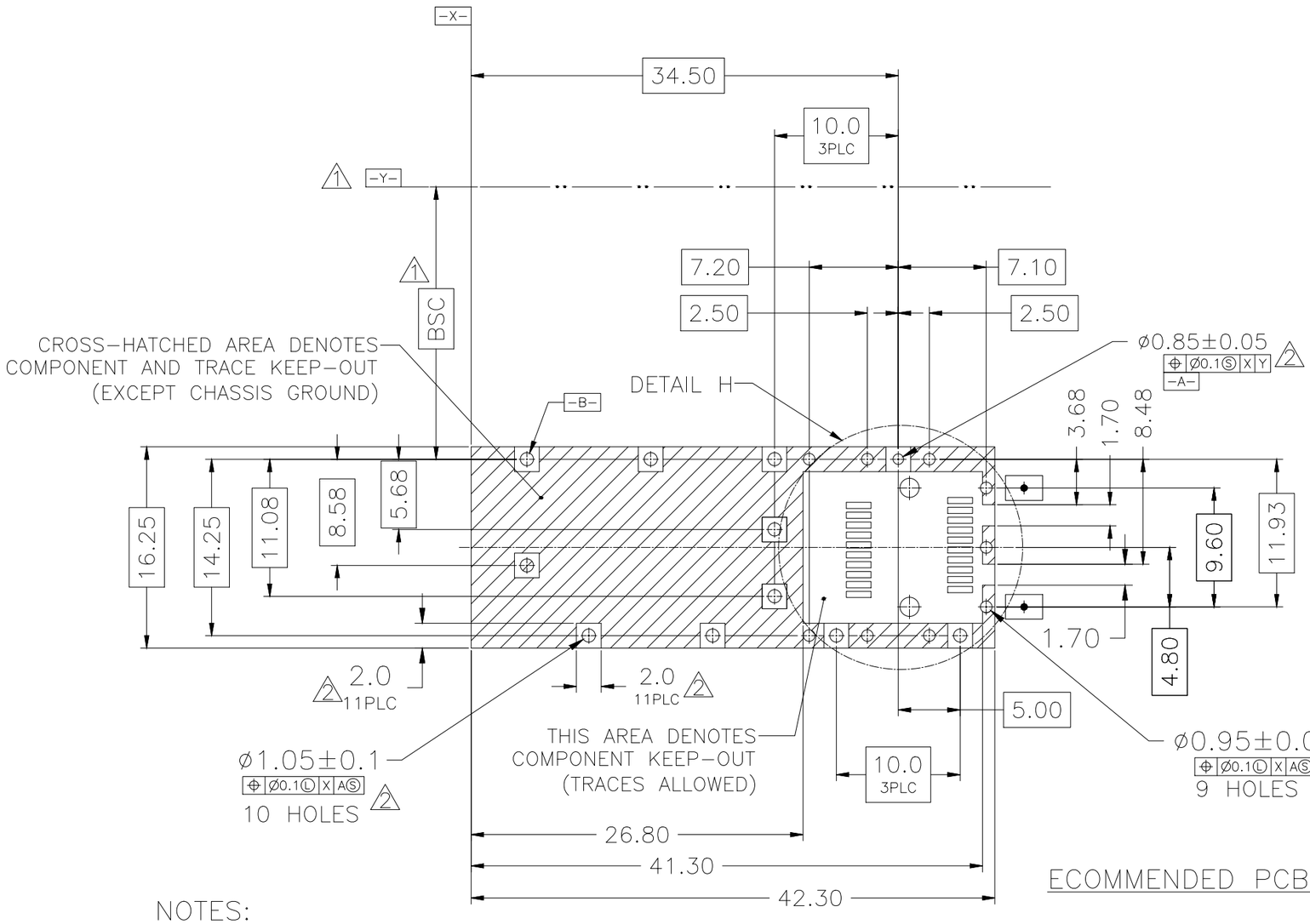

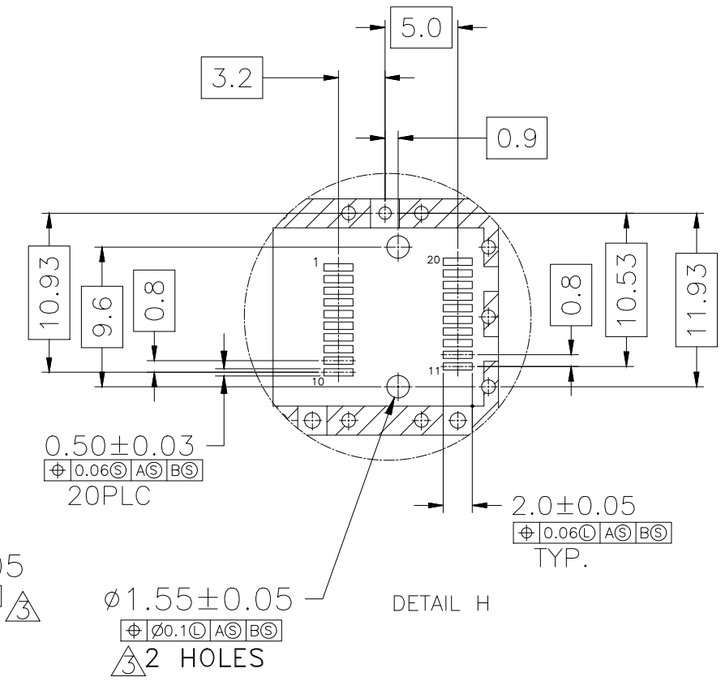

ECOMMENDED PCB CONFIGURATION

NOTES:

1. DATUM AND BASIC DIMENSIONS ESTABLISHED BY CUSTOMER
2. PADS AND VIAS ARE CHASSIS GROUND, 11 PLACES
3. THRU HOLES, PLATING OPTIONAL

RoHS 2011/65/EU

TITLE: SFP 1X1 CAGE WITH EMI SPRING FINGER LIGHT PIPE			LINK-PP INT'L TECHNOLOGY CO., LIMITED			
PART NO.: LP11AC02300A			GENNERAL TOLERANCE		UNIT:MM	SIZE:A4
APPROVE	CHECK	DRAW	◦ X±0.20	◦ X±1°	SCALE:1:1	SHEET:2/3	REV:A
LEO	JAMES	JAMES	◦ XX±0.15	◦ XX±5°			
			◦ XXX±0.10			

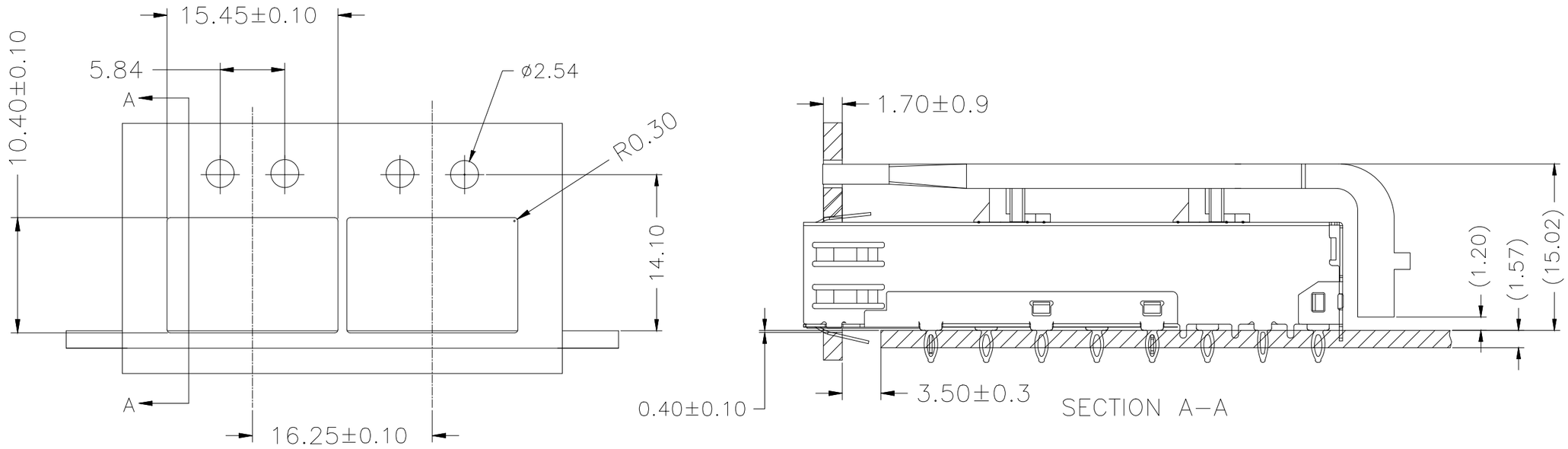

RECOMMENDED BEZEL DESIGN

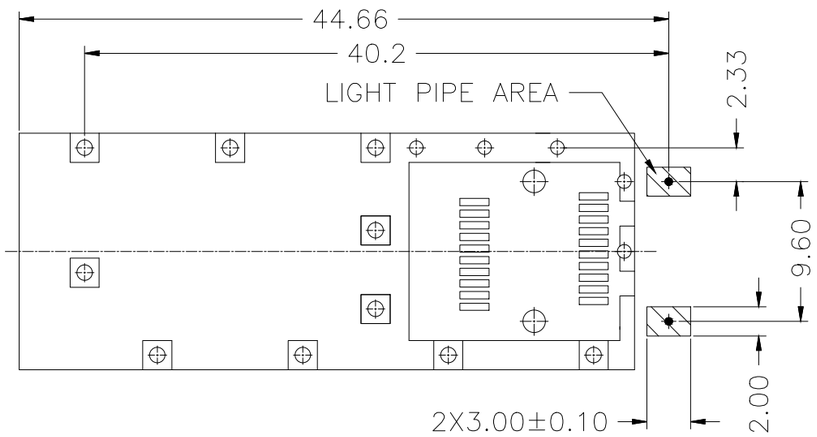

ECOMMENDED PCB CONFIGURATION

NOTES:

1. MINIMUM PITCH ILLUSTRATED, ENGLISH DIMENSIONS ARE FOR REFERENCE ONLY

RoHS 2011/65/EU

TITLE: SFP 1X1 CAGE WITH EMI SPRING FINGER LIGHT PIPE			LINK-PP INT'L TECHNOLOGY CO., LIMITED			
PART NO.: LP11AC02300A			GENNERAL TOLERANCE		UNIT:MM	SIZE:A4
APPROVE	CHECK	DRAW	◦ X±0.20	◦ X±1°	SCALE:1:1	SHEET:3/3	REV:A
LEO	JAMES	JAMES	◦ XX±0.15	◦ XX±5°			
			◦ XXX±0.10			