REV.	DESCRIPTION OF CHANGE	REVIEWED BY	ISSUE DATE
A	FIRST ISSUE	JULY	2024-09-04

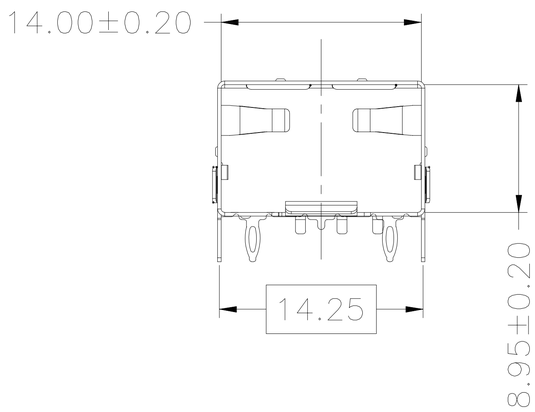

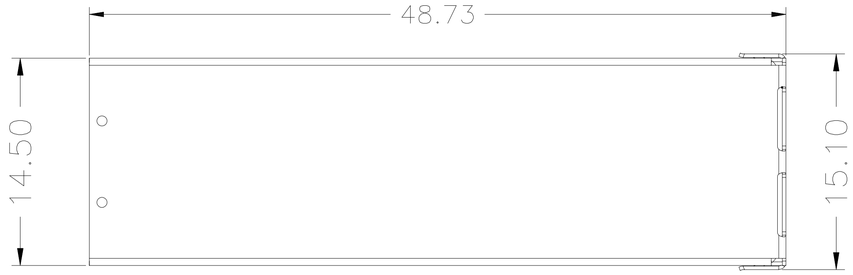

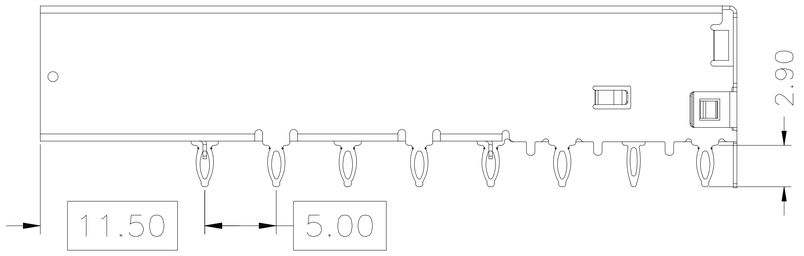

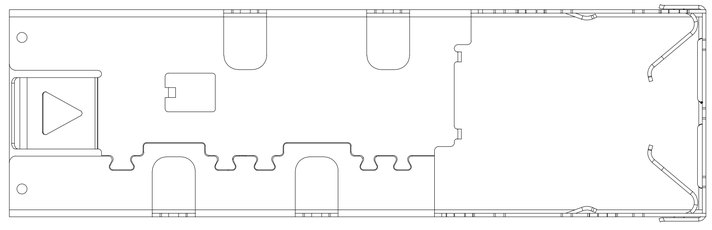

NOTES:

1.MATERIAL: COPPER ALLOY, NI-PLATED

2.PACKAGING: TRAY PACKAGING

3.TEMPERATURE RANGE: -55°C TO +85°C

4.PULL OUT FORCE: 4~8N

RoHS 2011/65/EU

TITLE	SFP 1X1 CAGE WITHOUT EMI SPRING FINGER	LINK-PP INT'L TECHNOLOGY CO., LIMITED
PART NO.	LP11AC02000N-NV	GENNERAL TOLERANCE

APPROVE	CHECK	DRAW
JULY	Kevin	Kevin

.X±0.25	.X±1°	SCALE:1:1	SHEET:1/3	REV:A
.XX±0.15	.XX±5°			
.XXX±0.10				

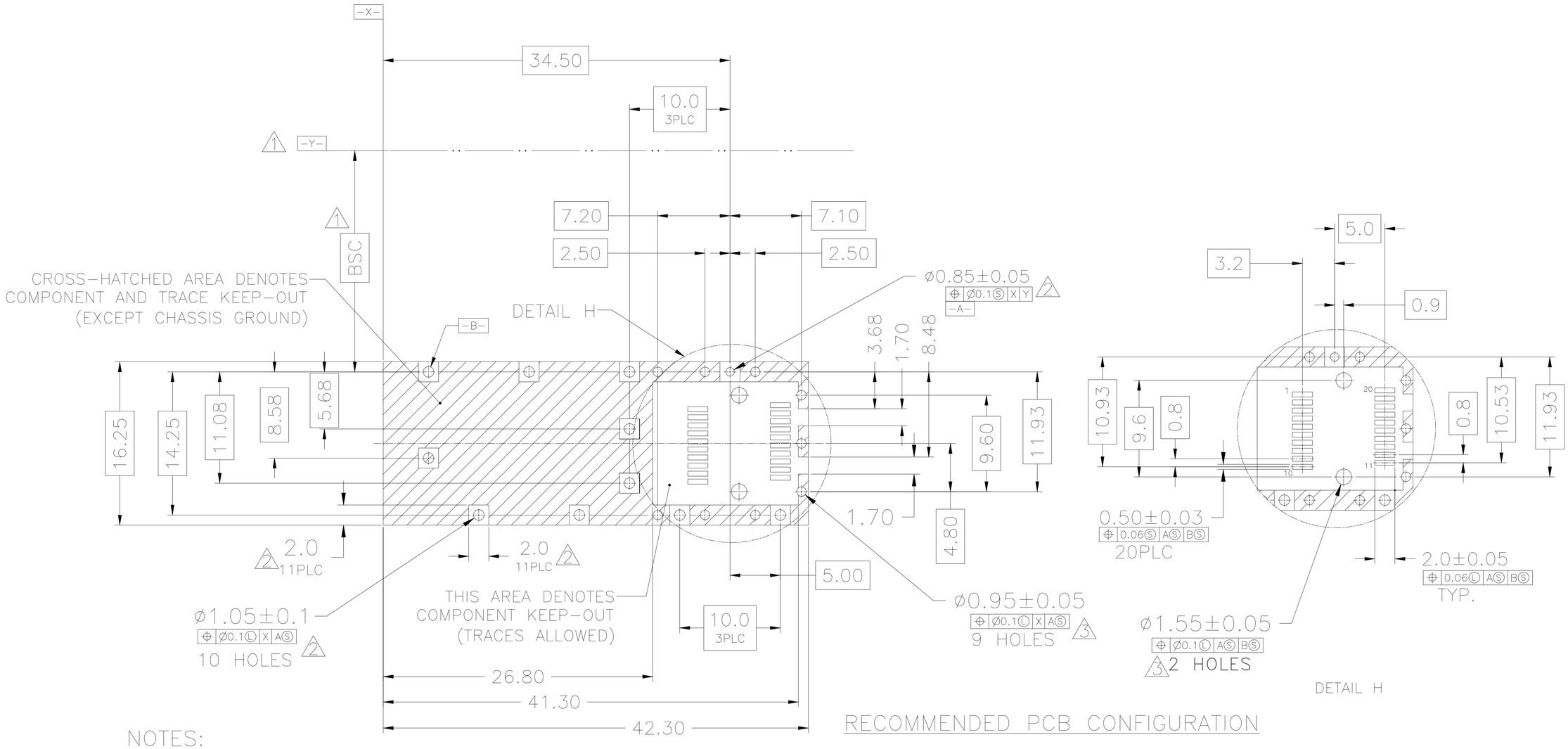

RECOMMENDED PCB CONFIGURATION

NOTES:

1. DATUM AND BASIC DIMENSIONS ESTABLISHED BY CUSTOMER
2. PADS AND VIAS ARE CHASSIS GROUND, 11 PLACES
3. THRU HOLES, PLATING OPTIONAL

RoHS 2011/65/EU

TITLE: SFP 1X1 CAGE WITHOUT EMI SPRING FINGER			LINK-PP INT'L TECHNOLOGY CO., LIMITED			
PART NO.: LP11AC02000N-NV			GENNERAL TOLERANCE		UNIT:MM	SIZE:A4
APPROVE	CHECK	DRAW	.X±0.25	.X±1°	SCALE:1:1	SHEET:2/3 REV:A
JULY	Kevin	Kevin	.XX±0.15	.XX±5°		
			.XXX±0.10			

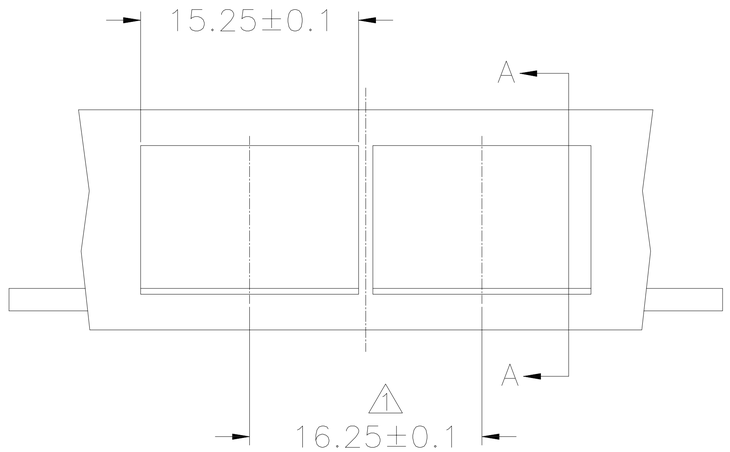

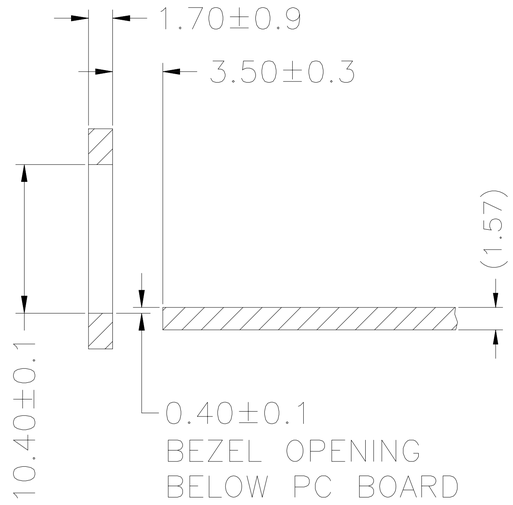

SECTION A–A

RECOMMENDED BEZEL DESIGN

NOTES:

1. MINIMUM PITCH ILLUSTRATED, ENGLISH DIMENSIONS ARE FOR REFERENCE ONLY

RoHS 2011/65/EU

TITLE: SFP 1X1 CAGE WITHOUT EMI SPRING FINGER			LINK-PP INT'L TECHNOLOGY CO., LIMITED				
PART NO.: LP11AC02000N-NV			GENNERAL TOLERANCE			UNIT:MM	SIZE:A4
APPROVE	CHECK	DRAW	.X±0.25	.X±1°	SCALE:1:1	SHEET:3/3	REV:A
JULY	Kevin	Kevin	.XX±0.15	.XX±5°			
			.XXX±0.10				