REV	DESCRIPTION OF CHANGE	REVIEWED BY	ISSUE DATE
A	FIRST ISSUE	LEO	2020-03-02

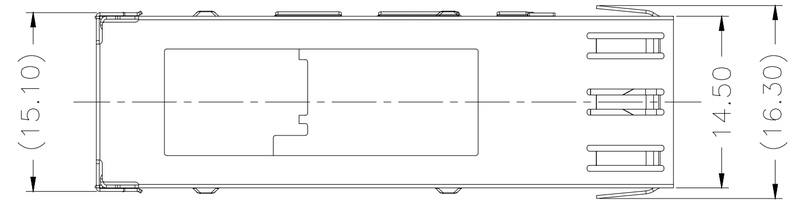

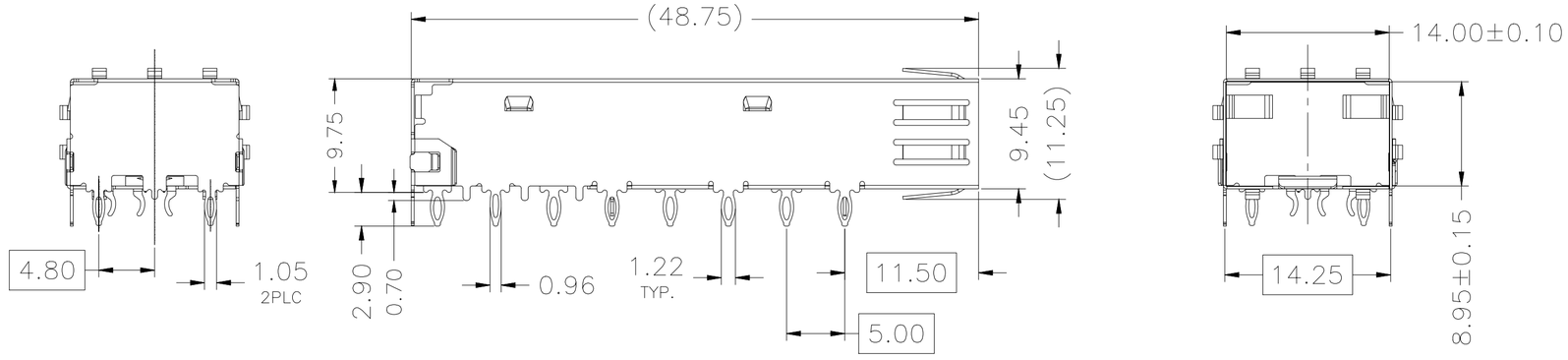

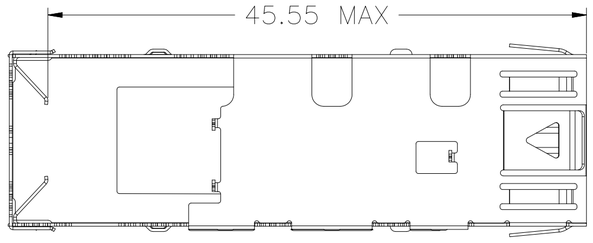

NOTES:
1.MATERIAL: COPPER ALLOY, THICKNESS 0.25mm, NI-PLATED
2.PACKAGING: TRAY PACKAGING
3.TEMPERATURE RANGE: -55°C TO +85°C

RoHS 2011/65/EU

TITLE: SFP 1X1 CAGE WITH EMI SPRING FINGER			LINK-PP INT'L TECHNOLOGY CO., LIMITED				
PART NO.: LP11AC02000E			GENNERAL TOLERANCE			UNIT:MM	SIZE:A4
APPROVE	CHECK	DRAW	◦ X±0.20	◦ X±1°	SCALE:1:1	SHEET:1/4	REV:A
LEO	JAMES	JAMES	◦ XX±0.15	◦ XX±5°			
			◦ XXX±0.10				

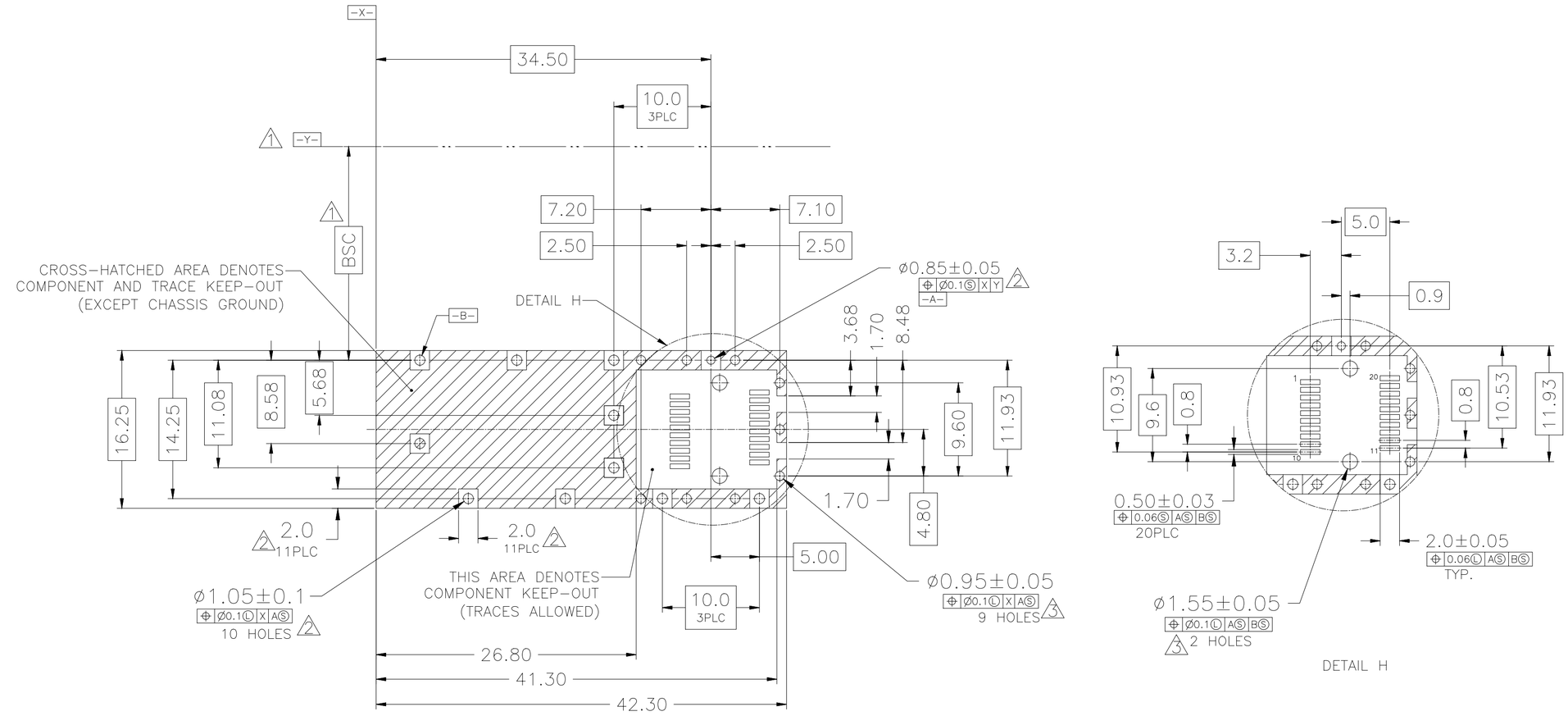

RECOMMENDED PCB CONFIGURATION

NOTES:

1. DATUM AND BASIC DIMENSIONS ESTABLISHED BY CUSTOMER
2. PADS AND VIAS ARE CHASSIS GROUND, 11 PLACES
3. THRU HOLES, PLATING OPTIONAL

RoHS 2011/65/EU

TITLE: SFP 1X1 CAGE WITH EMI SPRING FINGER			LINK-PP INT'L TECHNOLOGY CO., LIMITED			
PART NO.: LP11AC02000E			GENNERAL TOLERANCE		UNIT:MM	SIZE:A4
APPROVE	CHECK	DRAW	◦ X±0.20	◦ X±1°	SCALE:1:1	SHEET:2/4	REV:A
LEO	JAMES	JAMES	◦ XX±0.15	◦ XX±5°			
			◦ XXX±0.10			

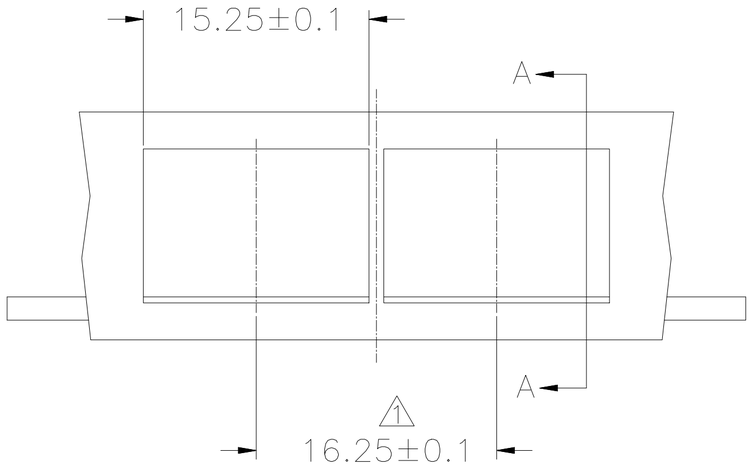

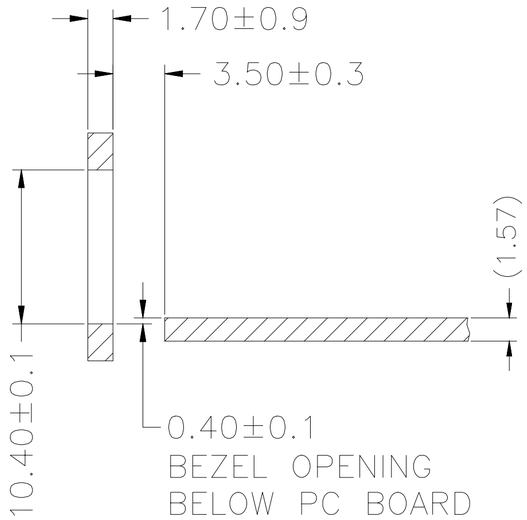

SECTION A–A

RECOMMENDED BEZEL DESIGN

NOTES:
1. MINIMUM PITCH ILLUSTRATED, ENGLISH DIMENSIONS ARE FOR REFERENCE ONLY

RoHS 2011/65/EU

TITLE: SFP 1X1 CAGE WITH EMI SPRING FINGER			LINK-PP INT'L TECHNOLOGY CO., LIMITED				
PART NO.: LP11AC02000E			GENNERAL TOLERANCE			UNIT:MM	SIZE:A4
APPROVE	CHECK	DRAW	◦ X±0.20	◦ X±1°	SCALE:1:1	SHEET:3/4	REV:A
LEO	JAMES	JAMES	◦ XX±0.15	◦ XX±5°			
			◦ XXX±0.10				

PACKAGE INFORMATION AND LABLE

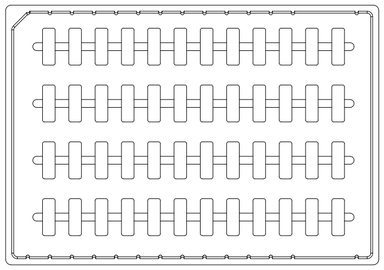

1. 48 PCS PRODUCTS IN TRAYS

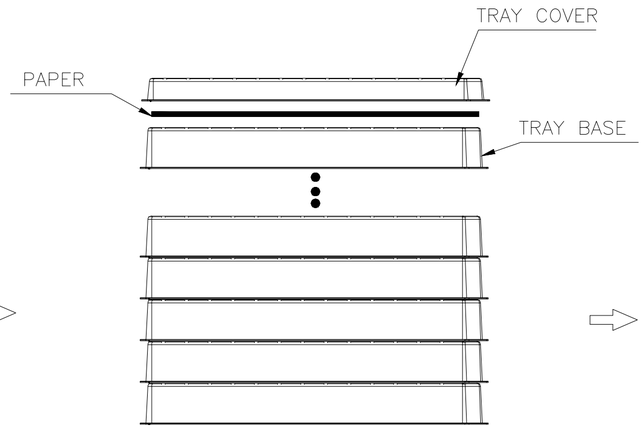

2. TRAYS OVERLAY:
(THE NEXT TRAY NEED ROTATE 180 DEGREE AND PUT IT ON PREVIOUS TRAY.)

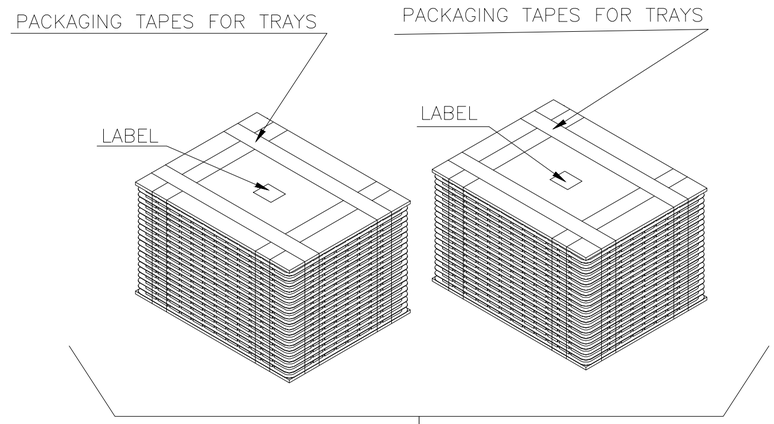

PACKAGING LISTS	
ITEM	Q'TY
PRODUCT	960 PCS
TRAY COVER	2 PCS
TRAY BASE	20 PCS
BOX(L514*W353*H213MM)	1 PCS
LABLE	3 PCS
PACKAGING TAPES	8 M (ABOUT)
PAPER	20 PCS

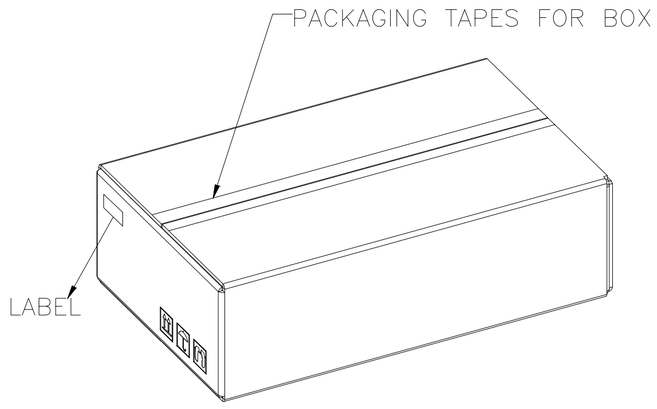

4. LABEL & PACKAGING TAPES FOR BOX

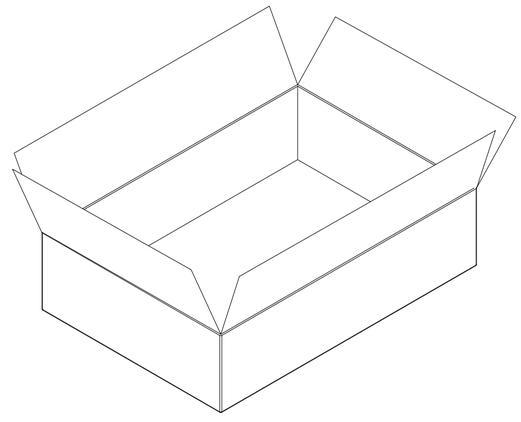

3. LABEL & PACKAGING TAPES FOR TRAYS:

RoHS 2011/65/EU

TITLE: SFP 1X1 CAGE WITH EMI SPRING FINGER			LINK-PP INT'L TECHNOLOGY CO., LIMITED			
PART NO.: LP11AC02000E			GENNERAL TOLERANCE		UNIT:MM	SIZE:A4
APPROVE	CHECK	DRAW	◦ X±0.20	◦ X±1°	SCALE:1:1	SHEET:4/4	REV:A
LEO	JAMES	JAMES	◦ XX±0.15	◦ XX±5°			
			◦ XXX±0.10			