REV	DESCRIPTION OF CHANGE	REVIEWED BY	ISSUE DATE
A	FIRST ISSUE	LEO	2021-12-02

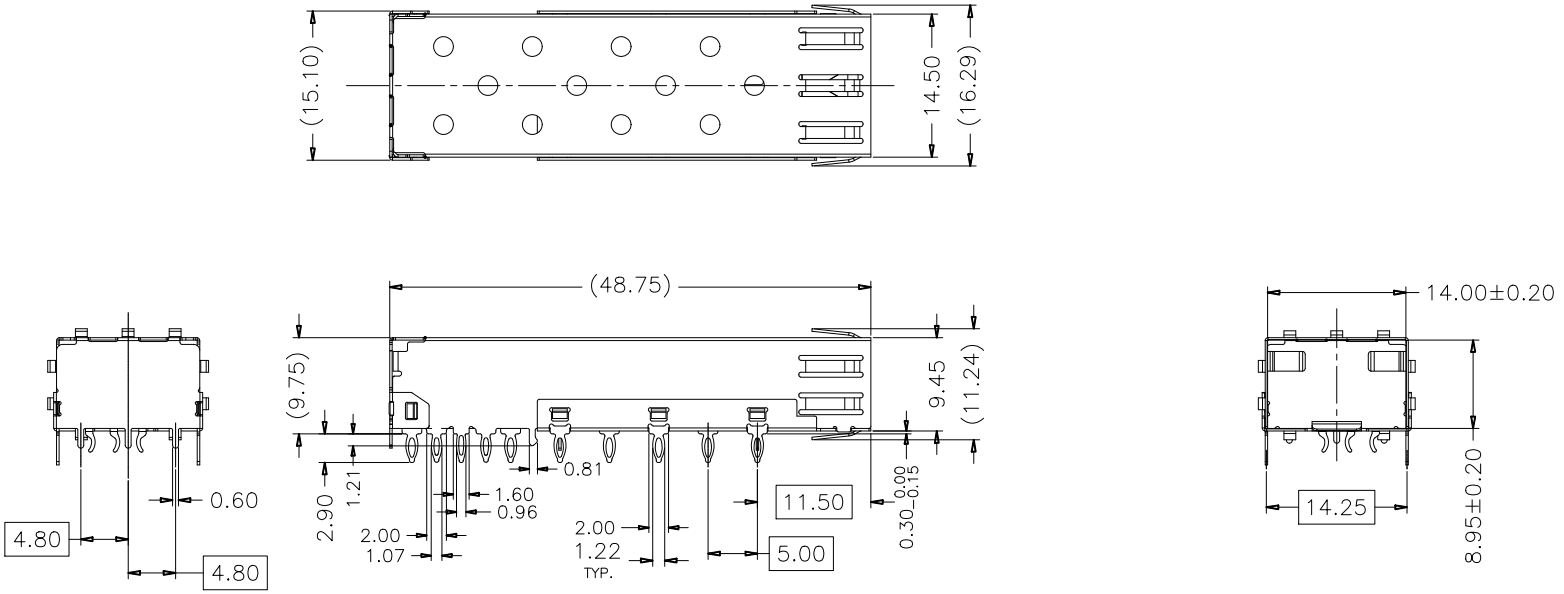

NOTES:

1.MATERIAL: COPPER ALLOY, THICKNESS 0.25mm

2.PACKAGING: TRAY PACKAGING

3.TEMPERATURE RANGE:
OPERATING : −40°C TO +85°C
NON OPERATING : −55°C TO +105°C

RoHS 2011/65/EU

TITLE: SFP 1X1 CAGE WITH EMI SPRING FINGER			LINK-PP INT'L TECHNOLOGY CO., LIMITED			
PART NO.: LP11AC02000D			GENNERAL TOLERANCE		UNIT:MM	SIZE:A4
APPROVE	CHECK	DRAW	◦ X±0.20	◦ X±1°	SCALE:1:1	SHEET:1/4 REV:A
LEO	JAMES	JAMES	◦ XX±0.15	◦ XX±5°		
			◦ XXX±0.10			

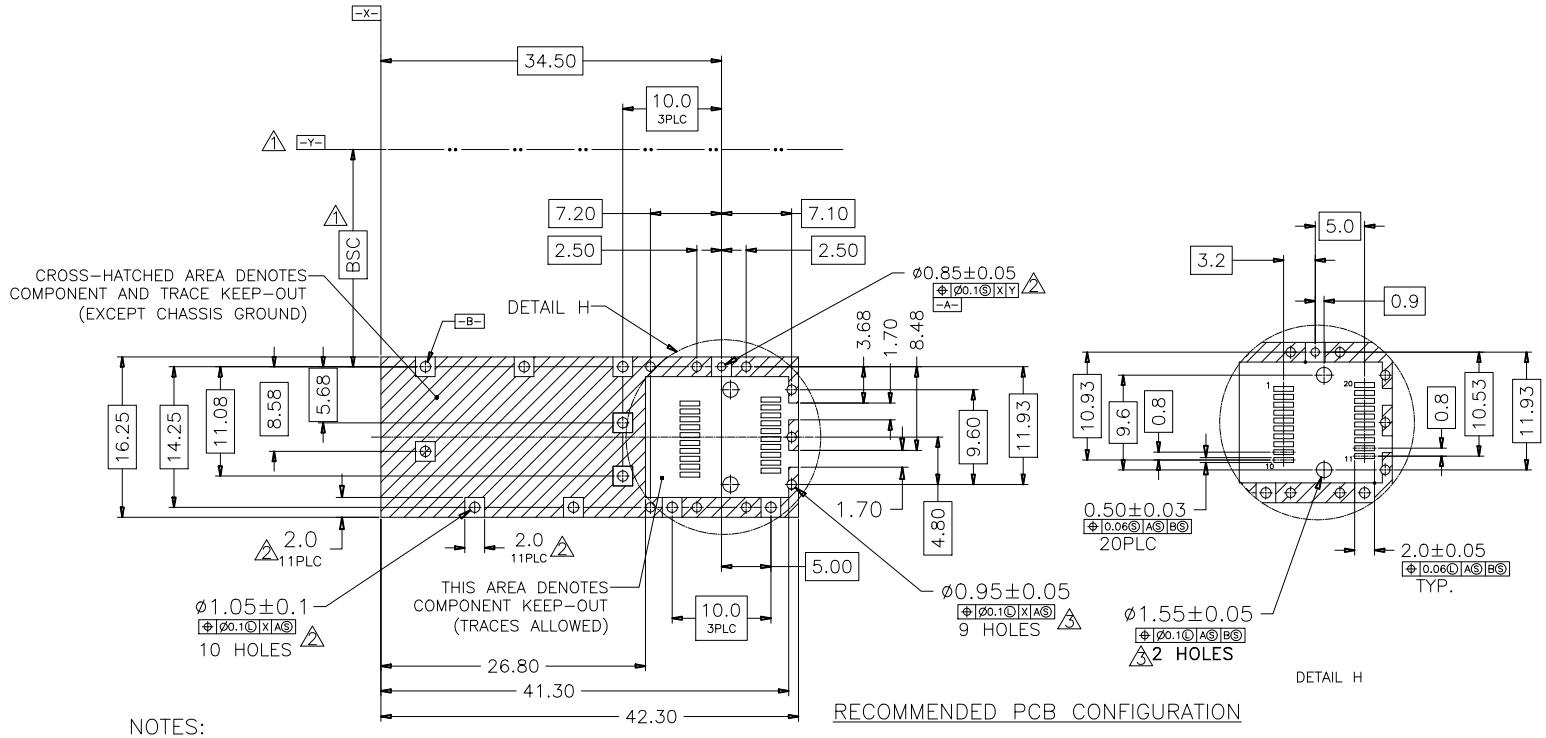

NOTES:

1. DATUM AND BASIC DIMENSIONS ESTABLISHED BY CUSTOMER
2. PADS AND VIAS ARE CHASSIS GROUND, 11 PLACES
3. THRU HOLES, PLATING OPTIONAL

RoHS 2011/65/EU

TITLE: SFP 1X1 CAGE WITH EMI SPRING FINGER			LINK-PP INT'L TECHNOLOGY CO., LIMITED			
PART NO.: LP11AC02000D			GENNERAL TOLERANCE		UNIT:MM	SIZE:A4
APPROVE	CHECK	DRAW	◦ X±0.20	◦ X±1°	SCALE:1:1	SHEET:2/4 REV:A
LEO	JAMES	JAMES	◦ XX±0.15	◦ XX±5°		
			◦ XXX±0.10			

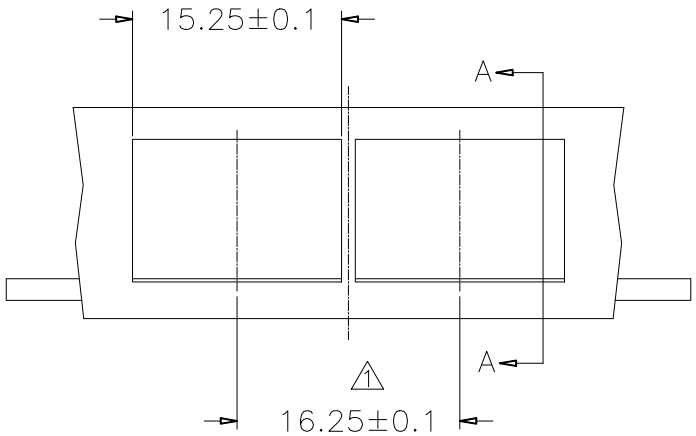

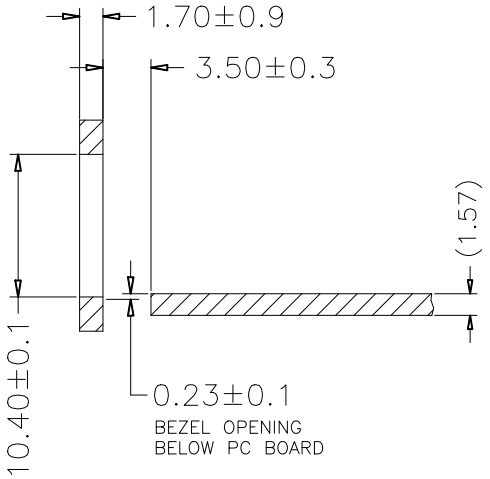

SECTION A–A

RECOMMENDED BEZEL DESIGN

NOTES:
1. MINIMUM PITCH ILLUSTRATED, ENGLISH DIMENSIONS ARE FOR REFERENCE ONLY

RoHS 2011/65/EU

TITLE: SFP 1X1 CAGE WITH EMI SPRING FINGER			LINK-PP INT'L TECHNOLOGY CO., LIMITED			
PART NO.: LP11AC02000D			GENNERAL TOLERANCE		UNIT:MM	SIZE:A4
APPROVE	CHECK	DRAW	◦ X±0.20	◦ X±1°	SCALE:1:1	SHEET:3/4	REV:A
LEO	JAMES	JAMES	◦ XX±0.15	◦ XX±5°			
			◦ XXX±0.10				

PACKAGE INFORMATION AND LABLE

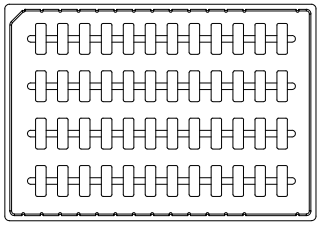

1. 48 PCS PRODUCTS IN TRAYS

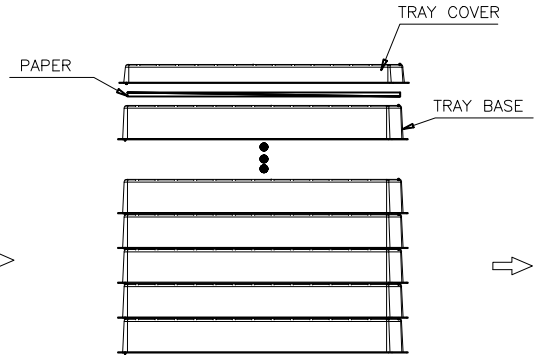

2. TRAYS OVERLAY:
(THE NEXT TRAY NEED ROTATE 180 DEGREE AND PUT IT ON PREVIOUS TRAY.)

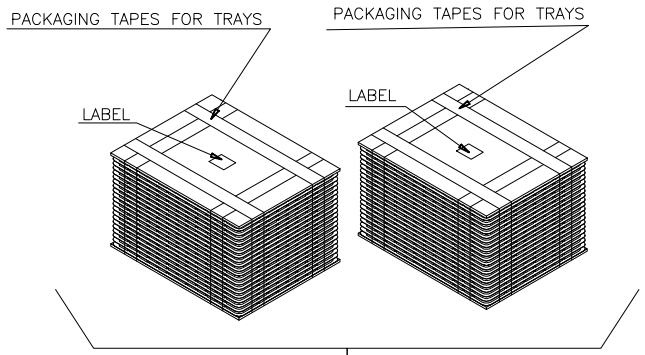

3. LABEL & PACKAGING TAPES FOR TRAYS:

PACKAGING LISTS	
ITEM	Q'TY
PRODUCT	960 PCS
TRAY COVER	2 PCS
TRAY BASE	20 PCS
BOX(L514*W353*H213MM)	1 PCS
LABLE	3 PCS
PACKAGING TAPES	8 M (ABOUT)
PAPER	20 PCS

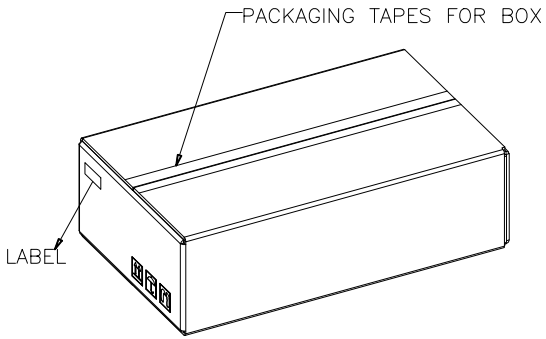

4. LABEL & PACKAGING TAPES FOR BOX

RoHS 2011/65/EU

TITLE: SFP 1X1 CAGE WITH EMI SPRING FINGER			LINK-PP INT'L TECHNOLOGY CO., LIMITED			
PART NO.: LP11AC02000D			GENNERAL TOLERANCE		UNIT:MM	SIZE:A4
APPROVE	CHECK	DRAW	◦ X±0.20	◦ X±1°	SCALE:1:1	SHEET:4/4	REV:A
LEO	JAMES	JAMES	◦ XX±0.15	◦ XX±5°			
			◦ XXX±0.10				