REV	DESCRIPTION OF CHANGE	REVIEWED BY	ISSUE DATE
A	FIRST ISSUE	LEO	2021-09-12

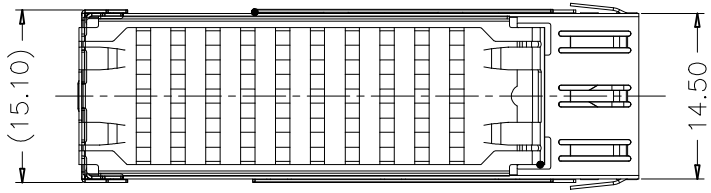

NOTES:
1.MATERIAL:
CAGE: COPPER ALLOY, THICKNESS 0.25mm
HEAT SINK : ALUMINUM(SURFACE TREATMENT: BLACK OXIDE)
CLIP: STAINLESS STEEL
2.PACKAGING: TRAY PACKAGING
3.TEMPERATURE RANGE: −55°C TO +85°C

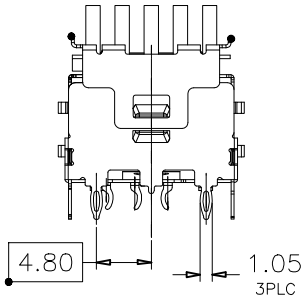

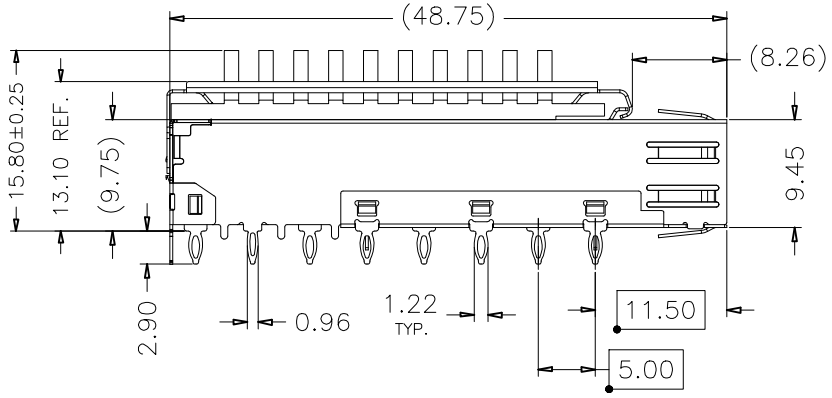

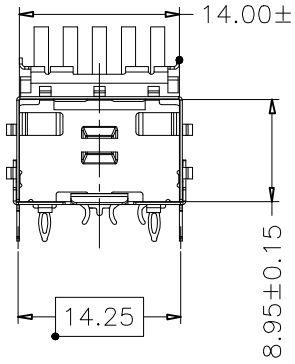

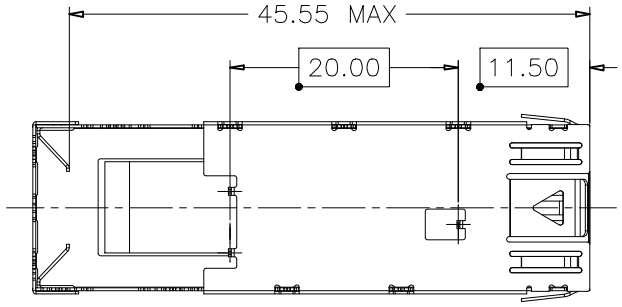

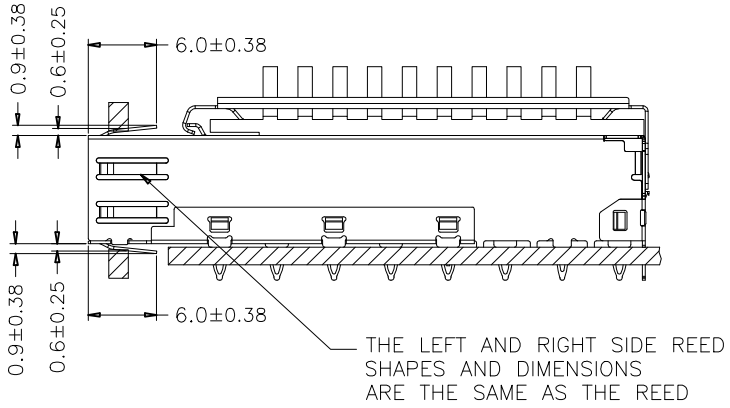

RoHS 2011/65/EU

TITLE: SFP 1x1 CAGE,WIHT EMI SPRING FINGER HEAT SINK	LINK-PP INT'L TECHNOLOGY CO., LIMITED	
PART NO.: LP11AC01050	GENNERAL TOLERANCE	UNIT:MM / SIZE:A4
APPROVE: LEO / CHECK: JAMES / DRAW: JAMES	◦ X±0.20, ◦ X±1°, ◦ XX±0.15, ◦ XX±5°, ◦ XXX±0.10	SCALE:1:1 / SHEET:1/4 / REV:A

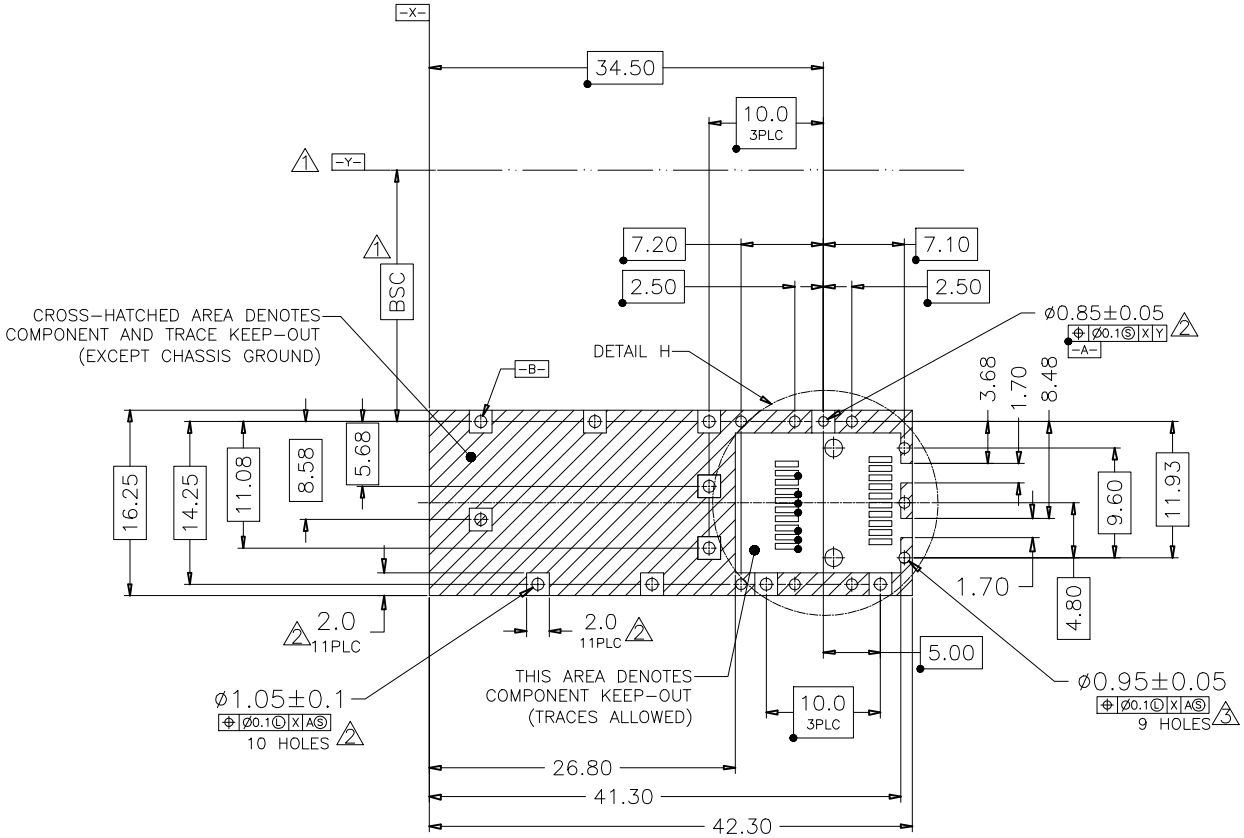

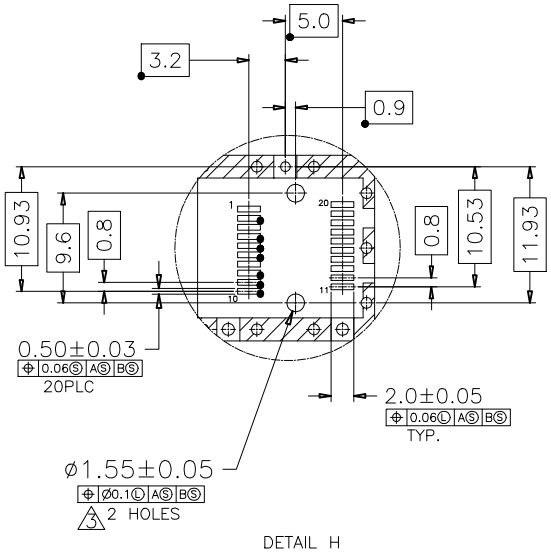

ECOMMENDED PCB CONFIGURATION

NOTES:

1. DATUM AND BASIC DIMENSIONS ESTABLISHED BY CUSTOMER
2. PADS AND VIAS ARE CHASSIS GROUND, 11 PLACES
3. THRU HOLES, PLATING OPTIONAL

RoHS 2011/65/EU

TITLE: SFP 1x1 CAGE,WIHT EMI SPRING FINGER HEAT SINK			LINK-PP INT'L TECHNOLOGY CO., LIMITED			
PART NO.: LP11AC01050			GENNERAL TOLERANCE		UNIT:MM	SIZE:A4
APPROVE	CHECK	DRAW	◦ X±0.20	◦ X±1°	SCALE:1:1	SHEET:2/4	REV:A
LEO	JAMES	JAMES	◦ XX±0.15	◦ XX±5°			
			◦ XXX±0.10				

NOTES:
1. MINIMUM PITCH ILLUSTRATED, ENGLISH DIMENSIONS ARE FOR REFERENCE ONLY

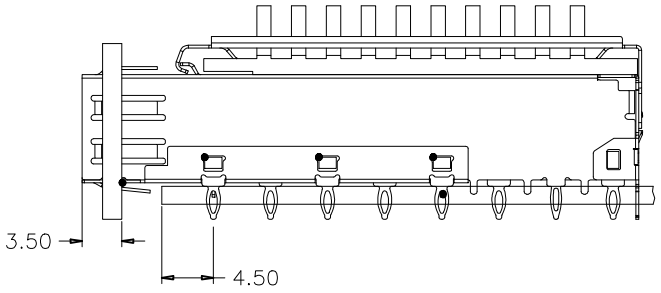

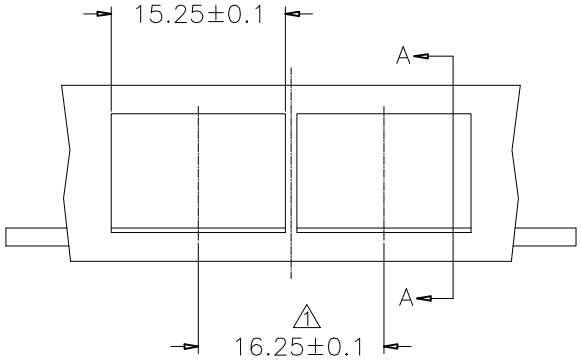

RECOMMENDED BEZEL DESIGN

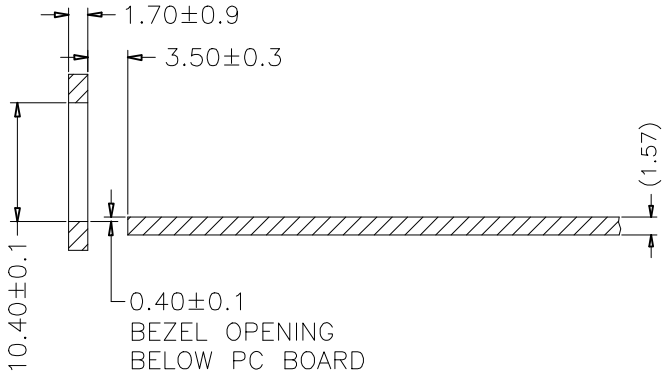

SECTION A–A

RoHS 2011/65/EU

TITLE: SFP 1x1 CAGE,WIHT EMI SPRING FINGER HEAT SINK			LINK-PP INT'L TECHNOLOGY CO., LIMITED				
PART NO. LP11AC01050			GENNERAL TOLERANCE			UNIT:MM	SIZE:A4
APPROVE	CHECK	DRAW	◦ X±0.20	◦ X±1°	SCALE:1:1	SHEET:3/4	REV:A
LEO	JAMES	JAMES	◦ XX±0.15	◦ XX±5°			
			◦ XXX±0.10				

PACKAGE INFORMATION AND LABLE

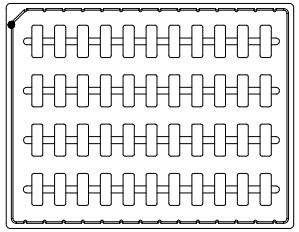

1. PRODUCTS IN TRAYS

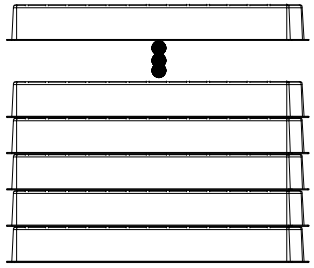

2. TRAYS OVERLAY:
(THE NEXT TRAY NEED ROTATE 180 DEGREE AND PUT IT ON PREVIOUS TRAY.)

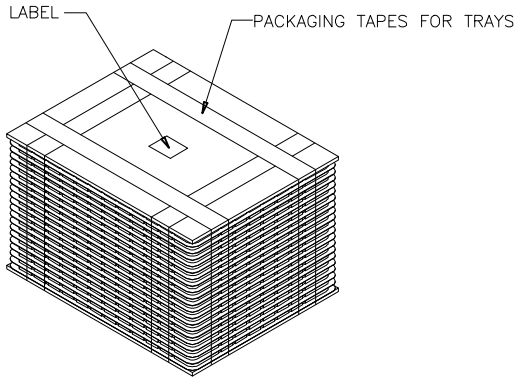

3. LABEL & PACKAGING TAPES FOR TRAYS:

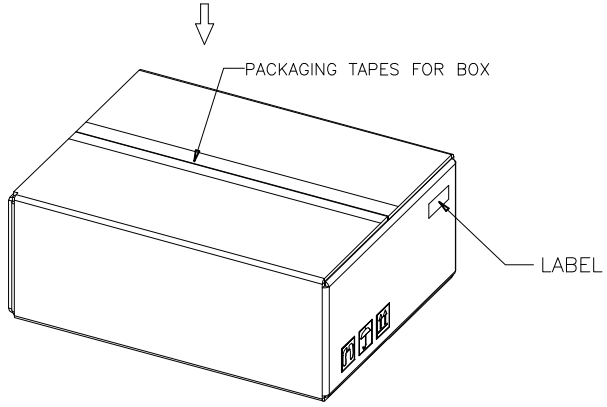

4. LABEL & PACKAGING TAPES FOR BOX

PACKAGING LISTS	
ITEM	Q'TY
PRODUCT	280 PCS
TRAY	8 PCS
BOX(L340*W265*H200MM)	1 PCS
LABLE	2 PCS
PACKAGING TAPES	8 M (ABOUT)

RoHS 2011/65/EU

TITLE: SFP 1x1 CAGE,WIHT EMI SPRING FINGER HEAT SINK			LINK-PP INT'L TECHNOLOGY CO., LIMITED			
PART NO. LP11AC01050			GENNERAL TOLERANCE		UNIT:MM	SIZE:A4
APPROVE	CHECK	DRAW	◦ X±0.20	◦ X±1°	SCALE:1:1	SHEET:4/4	REV:A
LEO	JAMES	JAMES	◦ XX±0.15	◦ XX±5°			
			◦ XXX±0.10				