L9-TD3101-02PPI

1×9 155Mbps Transceiver

Features

- FP Laser Diode Transmitter
- Up to 2 Km on 62.5/125μm MMF
- 3.3V or 5Vpower supply
- SC/ST/FC duplex optical interface
- (LV)PECL Differential Input /Output and (LV)PECL signal detect
- Class 1 Laser International Safety Standard IEC 825 Compliant
- Operating case temperature range (Industrial： -40°C to +85°C)

Applications

- ATM 155Mbps
- SONET/SDH
- 100Mbps Ethernet
- Digital Video system
- Other optic link



Product Description

Link-pp's L9-TDxx01-02PPI series of transceiver modules are the perfect solution for low -speed communication networks. These transceiver modules support data rates up to 200Mbps. The module is fully compliant with the Multi-sourced 1×9 protocol. These transceiver modules provides the system designer with products to implement a range of FDDI and ATM designs at the 100Mbps/125Mbps rate and SONET/OC-3, SDH/STM-1 for Telecommunication.

Copyright © 2016 LINK-PP All Rights Reserved

Absolute Maximum Ratings

Operating of the transceiver beyond the Absolute Conditions Listed in Table 1 will degrade or damage the product. It's not implied that the product would function above the recommended operating environment, it's possible to reduce the reliability and lifetime of device if Recommended Operating Environment is exceeded (Refer to table 2)

Table 1--- Absolute Maximum Conditions

Parameter		Symbol	Min	Max	Units	Note
Storage Temperature		T_{ST}	-40	+85	℃	-
Relative Humidity		RH	5	95	%	-
Supply Voltage	3.3V power	V_{CC}	0	+3.6	V	-

Table 2--- Recommended Operating Environment and Electrical Characteristics

Parameter		Symbol	Min	Typ	Max	Units	Note
Supply Voltage	3.3V power	V_{CC}	+3.1	+3.3	+3.5	V	-
Supply Current(Tx+Rx)		Icc	-	-	150	mA	-
Operating Case Temperature		T_{OP}	0	-	+70	℃	1
			-40	-	+85		2
Data Rate		B	10	155	200	Mbps	-
Soldering temperature		-	-	-	350	℃	3
Soldering duration		-	-	-	10	Sec	3

Note 1: Standard level
Note2: Industrial level
Note 3: Not recommended wave soldering.

Optical Parameters

Table 3--- L9-TD3101-02PPI Transceiver Optical Characteristics
(Ambient Operating Temperature Ta=+25±5°C, VCC = 3.3 or 5.0±0.2V)

Copyright © 2016 LINK-PP All Rights Reserved

Parameter		Symbol	Min	Typ	Max	Units	Note
Transmitter							
Data rate		B	10	155	200	Mbps	-
Output Center Wavelength		λc	1260	1310	1360	nm	-
Output Spectral width (RMS)		λ	-	-	4	nm	-
Average Optical Output Power		Po	-20	-	-14	dBm	1,2,3
			-18	-	-10		1,2,4
Extinction Ratio		ER	10	-	-	dB	1,2
Optic Output Eye: Compliant with Bellcore TR-NWT-000253 and ITU recommendation G.957							1,2
Receiver							
Receiver Sensitivity		P_{min}	-	-	-32	dBm	1,2
Receiver Saturation		P_{max}	-3	-	-	dBm	1,2
Operation Center Wavelength		λc	1260	-	1620	nm	-
SD	Deassert	PD	-45	-	-	dBm	1,2
	Assert	PA	-	-	-32	dBm	1,2
SD Hysteresis		SDHYS	0.5	-	-	dB	-

Note1: The optical power is launched into 62.5/125μm MMF.
Note2: With a PRBS 2^{23}-1 test pattern@ 155Mbps.
Note3: Average Optical Output Power range 1.
Note4: Average Optical Output Power range 2.

Electrical Parameters

Table 4--- Transceiver Electrical Characteristics

(Ambient Operating Temperature Ta=+25±5°C, VCC = 3.3 or 5.0±0.2V)

Parameter		Symbol	Min	Typ	Max	Units	Note
Supply Voltage	3.3V power	V_{CC}	+3.1	+3.3	+3.5	V	-
Supply Current(Tx+Rx)		I_{CC}	-	-	150	mA	-
Transmitter							
Differential Input Voltage		Vin	400	-	2000	mV_{P-P}	-
Input Differential Impedance		Zin	90	100	110	Ω	-
Data Input Voltage - Low		V_{IL}	V_{CC} -1.81	-	V_{CC} -1.48	V	-
Data Input Voltage - High		V_{IH}	V_{CC} -1.17	-	V_{CC} -0.88	V	-

Copyright © 2016 LINK-PP All Rights Reserved

Receiver						
Differential Output Voltage	V_{OUT}	400	-	2000	mV_{P-P}	-
Data Output Voltage – Low	V_{OL}	V_{CC} -1.83	-	V_{CC} -1.56	V	1
Data Output Voltage – High	V_{OH}	V_{CC} -1.09	-	V_{CC} -0.88	V	1
SD Output Voltage-Low	V_{OL}	V_{CC} -2.0	-	V_{CC} -1.56	V	2
SD Output Voltage-High	V_{OH}	V_{CC} -1.1	-	V_{CC} -0.75	V	2
SD Output Voltage-Low	V_{OL}	0	-	0.8	V	3
SD Output Voltage-High	V_{OH}	2	-	V_{CC}	V	3

Note1： Outputs are terminated with 50Ω to VCC-2V&Related to VCC
Note2： (LV)PECL signal detect
Note3： (LV)TTL signal detect

Pin Definitions

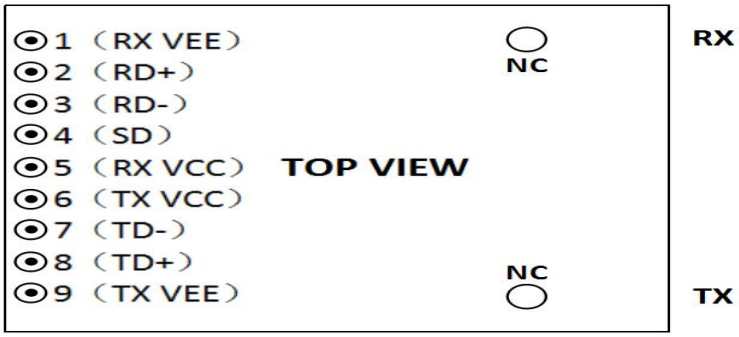

Table 5---Connector pin assignment

Pin #	Pin Name	Description	Note
1	RX VEE	Receiver Signal Ground	-
2	RD+	Receiver Data Out	-
3	RD-	Receiver Data Out Bar	-
4	SD	Signal Detect，(LV)PECLor(LV)TTL ouputs	1
5	RX VCC	Receiver Power Supply	-

Copyright © 2016 LINK-PP All Rights Reserved

6	TX VCC	Transmitter Power Supply	-
7	TD-	Transmitter Data In Bar	-
8	TD+	Transmitter Data In	-
9	TX VEE	Transmitter Ground	-

Note1：(LV)PECL-Normal optical input levels to the receiver result in logic "1" output，pull-down 130Ωor 270Ω resistor；(LV)TTL-Normal optical input levels to the receiver result in logic "1" output,pull-up 10kΩresistor。

Recommended Circuit Schematic

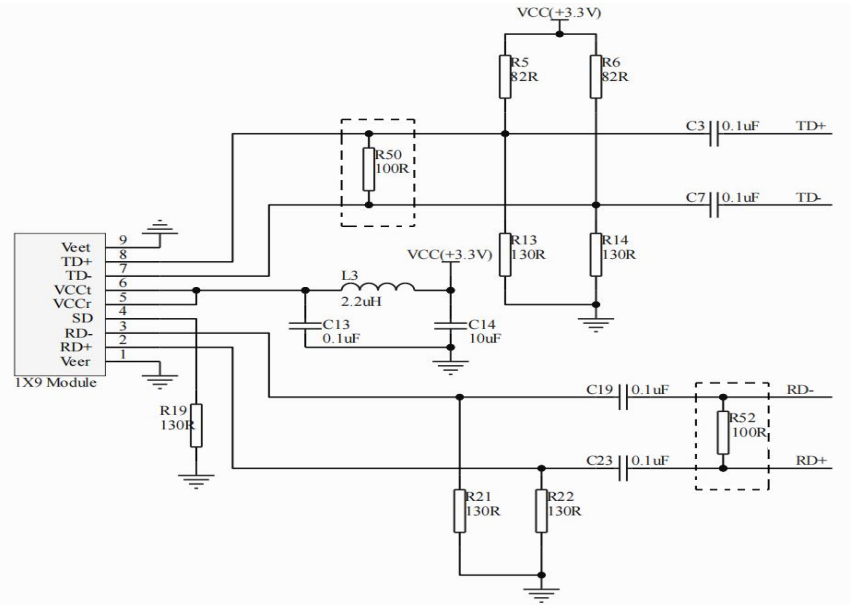

Recommended Circuit Schematic 3.3V SD LVPECL

Copyright © 2016 LINK-PP All Rights Reserved

Module Outline Drawing（Units in mm)

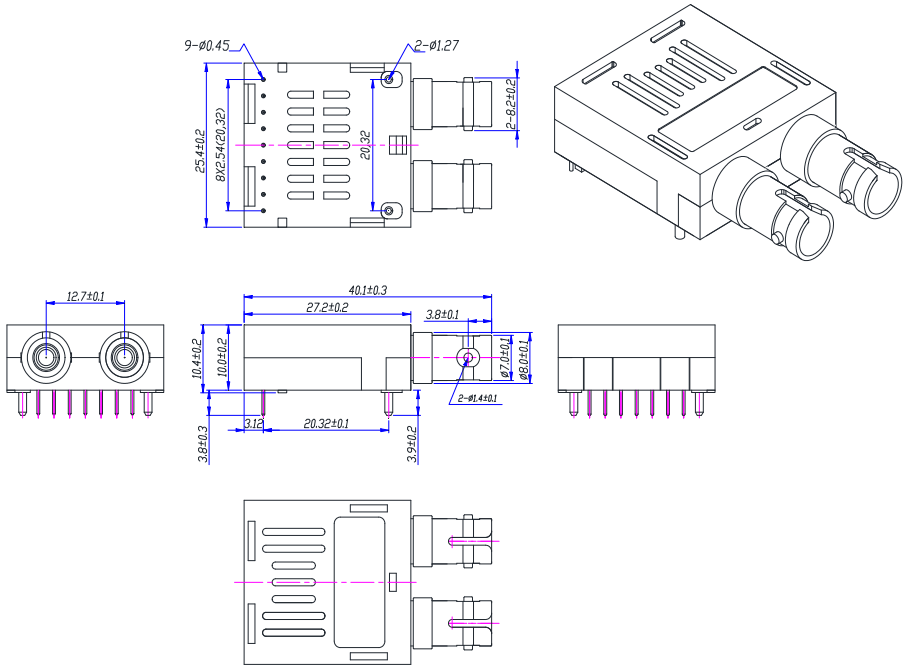

ST receptacle TYPE1(common)

Order Information

Type	OPTICAL INTERFACE	Fiber Type	Wavelength(nm)	Fiber Length(Km)	Note
L9-TD8501-02PPI	duplex ST	MM	850(VCSEL)	2~5	(LV)PECL signal detect , 3.3V Supply Voltage, -40°C ~85°C
L9-TD3101-02PPI	duplex ST	MM	1310(FP)	2~5	

Copyright © 2016 LINK-PP All Rights Reserved